TVS-5000 Series Forged Steel Trap Valve Station

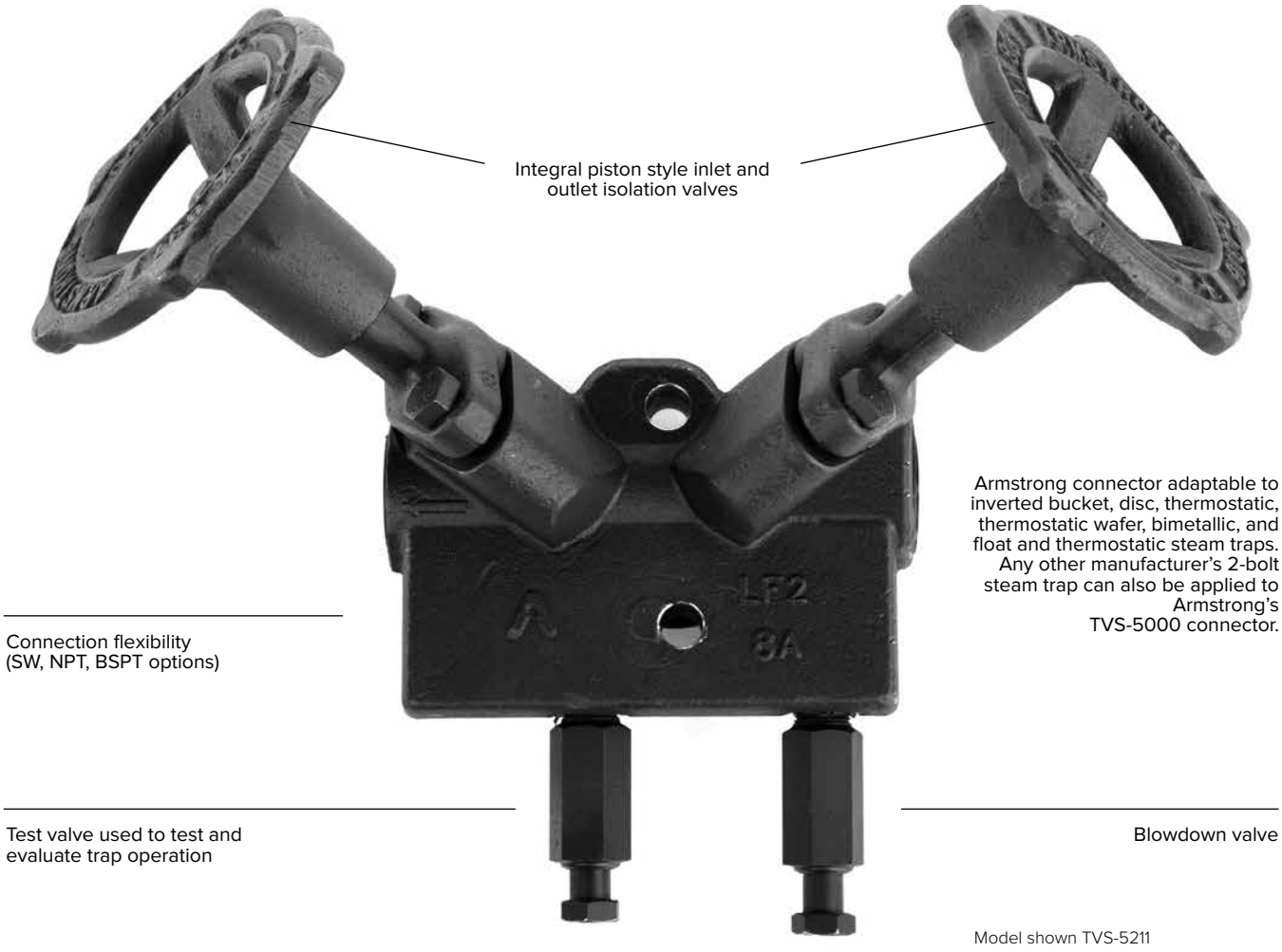

Model shown TVS-5211

Description
Armstrong's TVS-5000 is designed as a one piece body equipped with a piston valve(s) combined with a removable steam trap mounted with a connecting flange.

Maximum Operating Conditions

Maximum Allowable Pressure :	45 bar @ 315 °C
Maximum Allowable Temperature :	315 °C
Maximum Operating Pressure :	45 bar
Maximum Hydrostatic Pressure :	68 bar

Materials – TVS-5000 Connector

Connector:	ASTM A350 LF2
Test valve:	ASTM A582 T303
Blowdown valve:	ASTM A582 T303

Isolation Valve Components

Valve sealing rings :	Graphite & Stainless Steel
Bonnet :	ASTM A350 LF2
Bolts :	DIN 933 8.8
Valve plug :	ASTM A564 17-4 H900
Lantern bushings :	ASTM A582 T304
Valve washer :	ASTM A582 T304
Disc springs :	AISI T301
Nut :	AISI T304
Handwheel :	Ductile Iron

Weight
3.660 kg (without any trap)

Features
- **Reduced costs.** TVS-5000 saves on these fronts : reduced leak points, installation and maintenance time.
- **Reduced design time**. Permits combining products with exact face-to-face dimensions.
- **Easy, in-line repairability.**
- **Simplified trap testing.** TVS enhances your capability to check trap operation and offers a built-in method to block and bleed traps.

All dimensions and weights are approximate. Use certified print for exact dimensions. Design and materials are subject to change without notice.

Armstrong International SA • Parc Industriel des Hauts-Sarts (2e Avenue) • 4040 Herstal • Belgium
Tel.: +32 (0)4 240 90 90 • Fax: +32 (0)4 240 40 33
www.**armstrong**international.eu • info@**armstrong**international.eu

TVS-5000 Series Forged Steel Trap Valve Station

Table ST-161-1. Available Configurations

	TVS-5211	TVS-5210	TVS-5200	TVS-5111	TVS-5110	TVS-5100
Model		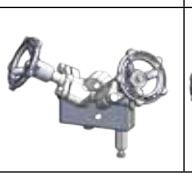				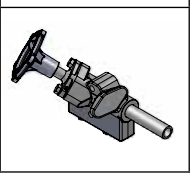
Size	1/2" 3/4"	1/2" 3/4"	1/2" 3/4"	1/2" 3/4"	1/2" 3/4"	1/2" 3/4"
Connection	Screwed, Socketweld, Flanged	Screwed, Socketweld, Flanged	Screwed, Socketweld, Flanged	Screwed, Socketweld, Flanged	Screwed, Socketweld, Flanged	Screwed, Socketweld, Flanged
Flow	L/R or R/L	L/R or R/L	L/R or R/L	L/R or R/L	L/R or R/L	L/R or R/L
Upstream Isolating Piston Valve	1	1	1	1	1	1
Downstream Isolating Piston Valve	1	1	1	N/A	N/A	N/A
Blowdown Valve	1	1	plugged	1	1	plugged
Test Valve	1	plugged	plugged	1	plugged	plugged

Table ST-161-2. How to Order

Model	Connection	Type of Connection Inlet/Outlet	Flow Direction	Trap Type
TVS-5000	1/2" 3/4"	NPT SW BSPT Flanged*	R/L = Right to Left L/R = Left to Right	Inverted Bucket Disc Thermostatic wafer Bimetallic F&T

*Consult factory.

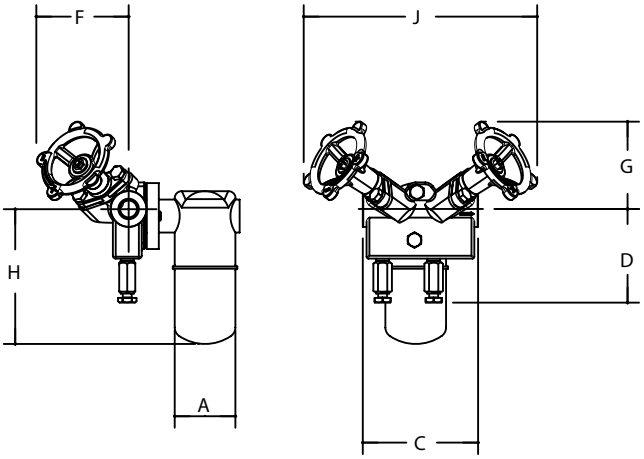

Table ST-161-3. TVS-5000 Series – TVS-5211 Trap Valve station mounted with 2011 Steam Trap

Pipe Connections	15 – 20
“A” Trap Diameter	68
“C” Face to Face (screwded NPT and socketwelded models)	122
“D” Connection ℄ to bottom	99
“E” Connection ℄ to Outside of Trap	117
“F” Connection ℄ to Front of Handwheel (Valve Open)	98
“G” Connection ℄ to Top of Handwheel (Valve Open)	108
“H” Connection ℄ to Bottom of Connector	143
“J” Width Across Handwheels (Valve Open)	270
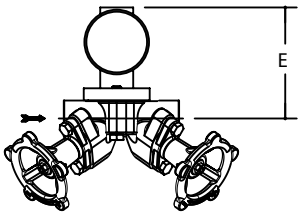
Pressures and capacities depending on the steam trap mounted on the Trap Valve Station.