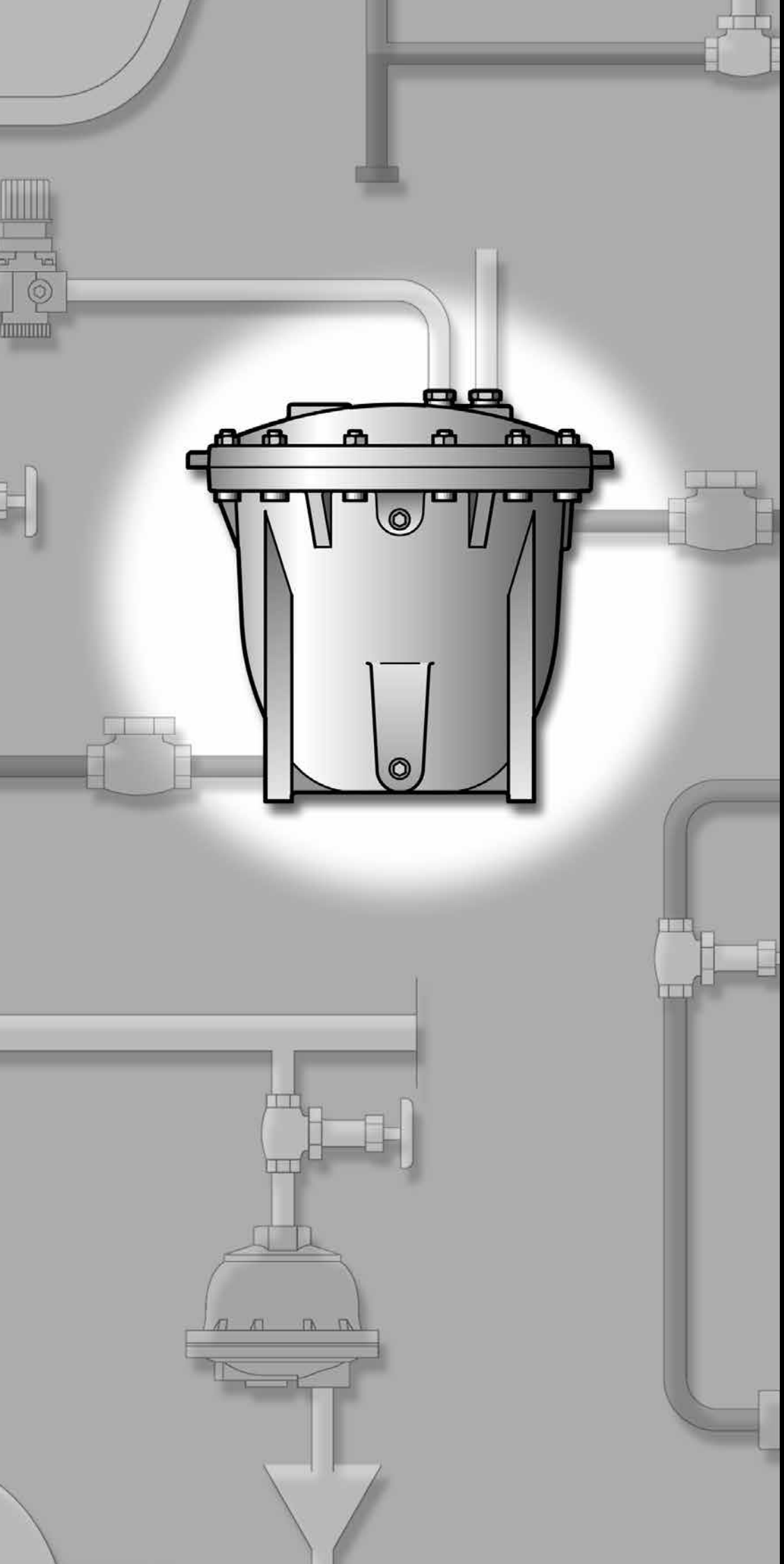

Condensate Recovery Equipment

Armstrong®

Pumping Traps

Inside Advantages
Mechanical condensate pumps operate with a spring-assisted float mechanism, which means the springs themselves are a major wear point. Armstrong pumping traps have large-diameter Inconel X-750 springs, which provide superior corrosion resistance and longer service life than those in competitive models. For other inside advantages, see below.

Notice the difference in spring design from the industry standard spring set (left) and the Armstrong Inconel spring set.

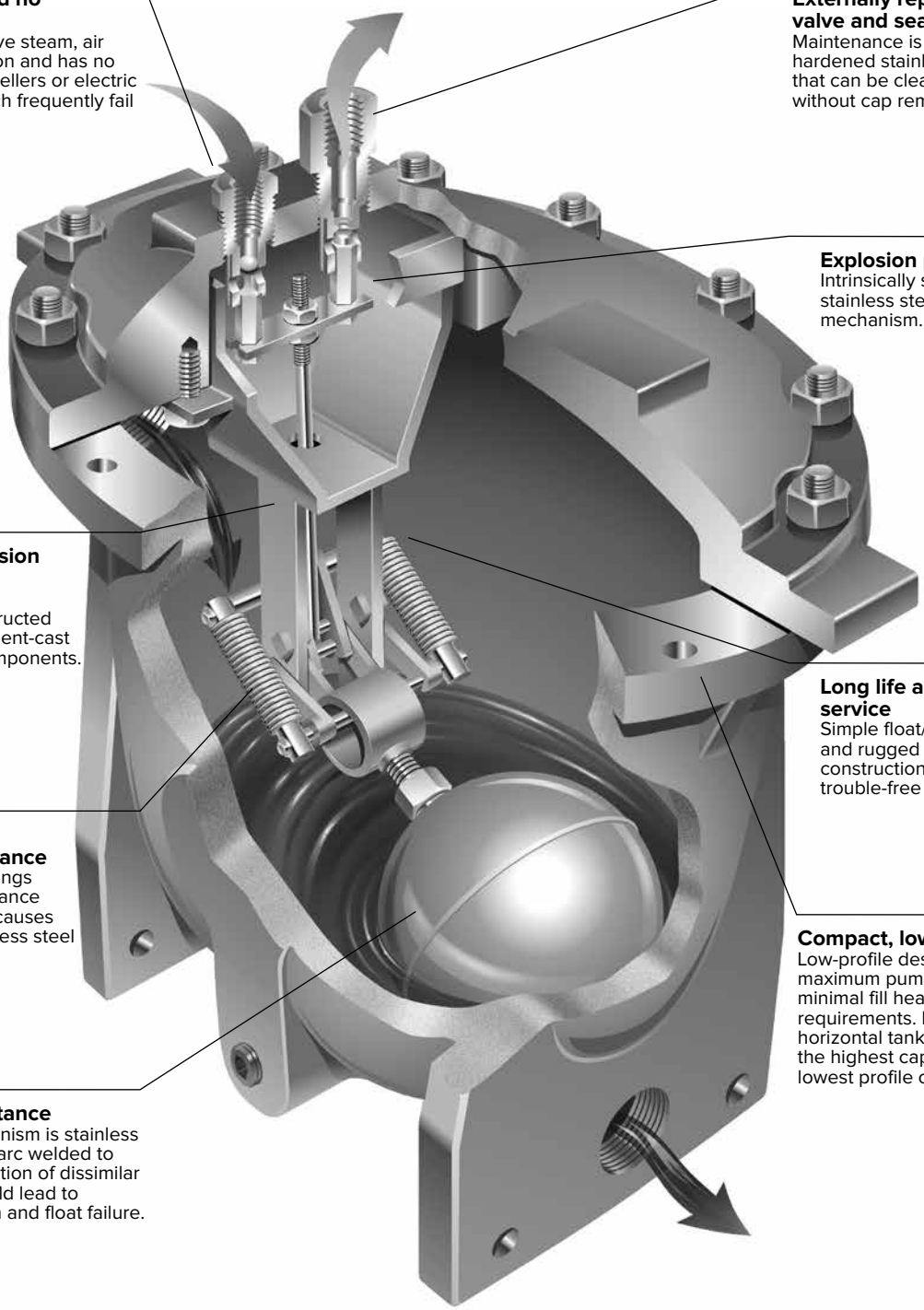

Non-electric and no cavitation
Utilizes inexpensive steam, air or gas for operation and has no seals, motors, impellers or electric components, which frequently fail due to cavitation.

Externally replaceable valve and seat assembly
Maintenance is a “snap” with hardened stainless steel valves that can be cleaned or replaced without cap removal.

Explosion proof
Intrinsically safe due to all-stainless steel construction of mechanism.

Wear and corrosion resistance
Mechanism frame assembly is constructed of rugged investment-cast stainless steel components.

Long life and dependable service
Simple float/spring operation and rugged all-stainless steel construction allow for long, trouble-free service life.

Stress chloride corrosion resistance
Inconel X-750 springs have higher resistance to the stress that causes lower-grade stainless steel springs to fail.

Compact, low-profile design
Low-profile design allows for maximum pump capacity with minimal fill head and floor space requirements. EPT-300 Series horizontal tank design provides the highest capacity with the lowest profile on the market.

Corrosion resistance
Entire float mechanism is stainless steel. Float is Heliarc welded to avoid the introduction of dissimilar metals, which could lead to galvanic corrosion and float failure.

Armstrong International SA • Parc Industriel des Hauts-Sarts (2e Avenue) • 4040 Herstal • Belgium
Tel.: +32 (0)4 240 90 90 • Fax: +32 (0)4 240 40 33
www.**armstrong**international.eu • info@**armstrong**international.eu

Effective Condensate Management = Energy Savings

The most basic part of energy management is utilizing all valuable kJ within the steam system. Depending on the pressure, condensate exiting a trap contains approximately 20% of the heat energy transferred at the boiler in the form of sensible heat. Effective recovery of condensate reduces four tangible costs of producing steam:

- Fuel/energy costs and CO_2 emissions associated with producing steam
- Boiler water make-up and sewage treatment
- Boiler water chemical treatment
- Boiler blow-down rate

These savings can be calculated using the attached savings form. Returning condensate saves money, energy and the environment. Pour money and energy savings back into your plant – not down the drain.

Condensate Recovery Savings Analysis **Location** _____ **Building** _____

Energy costs will vary from plant to plant and regions of the world. Values shown are conservative. Complete this form using your facilities' numbers to determine annual savings in your plant by returning condensate. If some costs are not known, use the figures below for conservative estimates.

A) Condensate Load .....= 2 m^3/h

B) Annual Hours of Operation .....= 5 000 h/year

C) Total Water and Sewage Cost .....= 1,0 € per m^3
c1) Untreated water and sewage .....= 0,5 € per m^3
c2) Water treatment chemicals .....= 0,5 € per m^3

D) Make-Up Water Preheating Requirements .....= 314 kJ/kg
d1) Condensate Return Temperature .....= 90°C
d2) Make-Up Water Temperature .....= 15°C

E) Steam Cost .....= 15 € per ton
e1) Steam Pressure .....= 3 bar
e2) Enthalpy at 3 bar .....= 2 738 kJ/kg

F) Annual Water Savings .....= 10 000 €

$$(A)2 \times (B)5\,000 \times (C)1{,}0$$

G) Savings for Preheating Make-Up Water .....= 17 606 €

$$\frac{(A)2 \times (B)5\,000 \times (D)314 \times (E)15}{(e2)2\,738 - ((d2)15 \times 4{,}186)}$$

H) Cost of Steam to Operate†
Armstrong Pump Trap .....= 450 €

$$\frac{3 \text{ kg steam/m}^3 \times (A)2 \times (B)5\,000 \times (E)15}{1\,000}$$

I) Total Euro Saved Annually (F + G - H) .....= 27 156 €

J) Payback Period in Years .....= 67 jours

$$\frac{**(\text{cost of equipment/installation})\ 5\,000\ €}{(I)27\,156}$$

** Estimated equipment and installation cost
† Cost to operate in example assumes an "open" vented system. If pump trap is used in "closed loop" application, energy of motive steam is completely used in the system.

Pumping Trap Operation

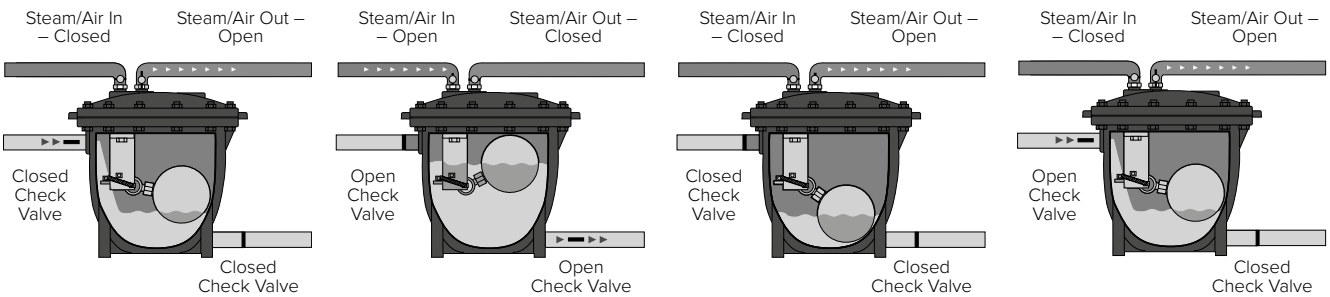

Filling
1. During filling, the steam or air inlet and check valve on pumping trap outlet are closed. The vent and check valve on the inlet are open.

Begin Pumping
2. Float rises with level of condensate until it passes trip point, and then snap action reverses the positions shown in step one.

End Pumping
3. Float is lowered as level of condensate falls until snap action again reverses positions.

Repeat Filling
4. Steam or air inlet and trap outlet are again closed while vent and condensate inlet are open. Cycle begins anew.

Condensate Recovery Equipment ID Charts

Table CRE-224-1. Armstrong Condensate Recovery Equipment

Illustration	Type	Connection Type	Max. Allow. Press. barg	TMA °C	Body Material	Mechanism Material	Model	Max. Oper. Press. barg	Capacity Range (condensate) kg/h	Connection Size 1"	1 1/2"	2"	3" x 2"	Located on Page
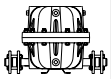	**Model EPT-104** Pumping Trap	PN40 Flanged	10	232	ASTM A48 Class 30 Cast Iron	Stainless Steel Inconel X-750 Spring	**EPT-104**	6	900	●				CRE-230
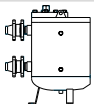	**Series EPT-200** Pumping Trap	PN40 Flanged	10	250	Fabricated Carbon Steel	Stainless Steel Inconel X-750 Spring	**EPT-204** **EPT-206**	9	1 716 2 620	● 	 ●			CRE-232
	Series EPT-400 Pumping Trap	PN40 Flanged	10	250	Fabricated Carbon Steel	Stainless Steel Inconel X-750 Spring	**EPT-404** **EPT-406** **EPT-408** **EPT-412**	9	2 520 3 705 5 000 7 310	●	●	●	●	CRE-234
	PT-400LL	150# ANSI Flanged												CRE-242
	Series EPT-300 Pumping Trap	PN40 Flanged	10	250	Fabricated Carbon Steel	Stainless Steel Inconel X-750 Spring	**EPT-308**	9	9 040			●		CRE-236
	PT-300LL	300# ANSI Flanged		260			**PT-312**		7 530				●	CRE-242
	Model EPT-516 Pumping Trap	150# ANSI Flanged	10	250	Fabricated Carbon Steel	Stainless Steel with Stainless Steel Springs	**EPT-516**	10	35 920	4" x 4"				CRE-238
	Double Duty® 4	Screwed	5	160	Ductile Iron	Stainless Steel	**EDD-4**	5	Pumping Capacities 159 kg/h Trapping Capacities 10 206 kg/h	●	●			CRE-244
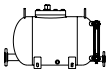	**Double Duty® 6**	Flanged	14	204	Carbon Steel	Stainless Steel Inconel X-750 Spring	**EDD-6**	14	Pumping Capacities 2 177 kg/h Trapping Capacities 10 206 kg/h	1 1/2" x 1"				CRE-246
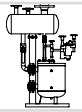	Open System Packages	PN40 Flanged 150# ANSI Flanged	10	250	Carbon Steel	Stainless Steel Inconel X-750 Spring	**Open System Packages**	9	1 470 18 880		●		●	CRE-248
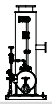	Vertical Open System Packages	PN40 Flanged ANSI Flanged	10	200	Carbon Steel	Stainless Steel	**Vertical Open System Packages**	8.5	1 470 7 530	4" x 1 1/2" 8" x 2"				CRE-250
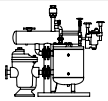	Closed System Packages	PN40 Flanged 150# ANSI Flanged	10	250	Carbon Steel	Stainless Steel Inconel X-750 Spring	**Closed System Packages**	9	1 470 12 240		●		●	CRE-252
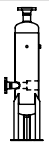	**Series EAFT** Flash Tanks	PN40 Flanged	10	260	Fabricated Steel P265GH / P275H Merkblätter		**EAFT-6** **EAFT-8** **EAFT-12** **EAFT-16**	10	900 2 270 4 540 9 070	Inlet: 50 - Vent: 65 Inlet: 80 - Vent: 100 Inlet: 100 - Vent: 150 Inlet: 150 - Vent: 150				CRE-254

Table CRE-224-2. Posi-Pressure Draining System & MTS - Thermosiphon Mixer

Illustration	Type	Fluid	Connection Type	Max. Allow. Press. barg	TMA °C	Body Material	Model	Maximum Operating Pressure barg	Connection Size	Located on Page
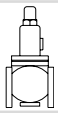	**GD-22** Posi-Pressure Regulator	Air	Screwed	10	80	Cast Iron	**GD-22**	10	1/2"	CRE-256
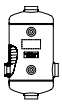	**MTS** hermosiphon Mixer	–	–	20	250	Stainless Steel or P265GH A106B	**MTS-300** **MTS-500**	20	3/4" x 1"	CRE-258

All dimensions and weights are approximate. Use certified print for exact dimensions. Design and materials are subject to change without notice.

Sizing and Selection – EPT-100/200/300/500/400 Series

The Armstrong non-electric pump trap is sized based on actual condensate load (kg/h) being pumped. The following steps are used to size the pump.

1. Determine the total condensate load to be pumped in kg/h. See conversion factors tables on specific product page.
2. Determine the total back pressure the pump will operate against. Total back pressure is the sum of the following:
   - Vertical lift expressed in barg (10 m lift = 1 barg).
   - Existing pressure in condensate return line or condensate collecting tank.
   - Frictional loss from pipe, valves and fittings.
3. Determine type of motive gas to be used (steam, air or other inert gas) and pressure available.

Example:
- Condensate load = 1 100 kg/h.
- Total back pressure = 1,5 barg.
  (5 m vertical lift = 0,5 barg, 1 barg in condensate return line).
- Motive pressure is steam at 3,5 barg.

Solution: Model EPT-206
Find 1,5 barg total lift or back pressure in column two of EPT-200 Pumping Trap Capacities table on page CRE-233. Then find 3,5 barg motive pressure in column one. Move across the capacity table until you reach a model number with the correct capacity. An EPT-206 has been highlighted above for this example.

Either a closed reservoir pipe or a vented receiver is required for proper condensate storage during the pump-down cycle of the pumping trap.

For vented / open system receiver sizing:
- Determine the pressure from where the condensate is being discharged.
- Determine condensate load.

Reference Percentage of Flash Steam chart on page CRE-240 to find the pressure that corresponds with the discharge condensate pressure. For this example, use 1,0 barg.

Follow 1,0 barg on the horizontal axis where it intersects the curve. Move left from the intersecting lines to the vertical axis for the percentage of flash steam that is created. For this example it will be 3% (see shaded area on Percentage of Flash Steam chart).

Multiply 3% by the condensate load. Using example above:
1 100 kg/h x 0,03 = 33 kg/h flash steam

Using the Vented Receiver Sizing table CRE-240-2 on page CRE-240, find the amount of flash steam in column one. Follow the table across to determine the size of the vented receiver. (See shaded area on Vented Receiver Sizing table CRE-240-2 for this example.)

For closed reservoir piping:
- Determine condensate load (using example above 1 100 kg/h).

Reference the inlet reservoir pipe sizing table CRE-240-1 for closed systems on page CRE-240. Find 1 100 kg/h in column one. Move horizontally across to find proper pipe size. (Note length or diameter may be slightly enlarged when capacity falls between given condensate loads in column one.) Selection is shaded.

Accessories

Use of external check valves required for operation of pumping trap.

Insulation Jacket

Features
- Lower risk of injury
- Higher energy efficiency
- Delays potential freezing

Gauge Glass Assembly

Features:
- Condensate load monitoring
- Allows troubleshooting not only of the pump, but also of the installation upward

Note: The above applies to all models.

Digital Cycle Counter

Features
- Totalizer is UL recognized, CSA certified
- 5-year lithium battery life
- Eight-digit counter readout
- Both totalizer and housing are Nema 4 rated, for protection against dust particles and water
- Easily installed on pumping traps
- Optional auxiliary contacts available upon request
- Push-button reset on face or key lock reset for security

- Rated for temperatures up to 178°C
- Closed loop option available

Find more information on our Digital Cycle Counter on our website **armstrong**international.eu.
Reference Bulletin No. AFH-237.

General Applications

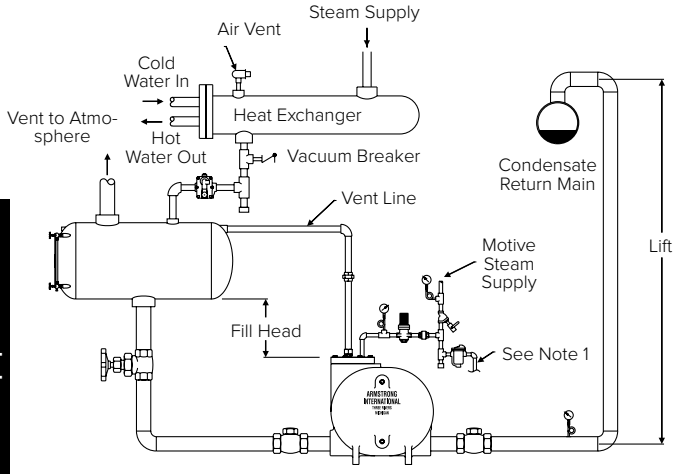

Multiple or single traps discharging to vented receiver.

OPEN SYSTEMS

For the majority of applications, a steam trap is recommended on each piece of heat exchange equipment. The steam trap, or traps, discharge to a vented receiver where flash steam will be vented to the atmosphere. The pump trap is located downstream and below the vented receiver, allowing for proper fill head height. See table CRE-240-2 for vented receiver and vent sizing for an open system.

Note: Drip trap on pump motive line may be discharged into the receiver, the return line or to the drain.

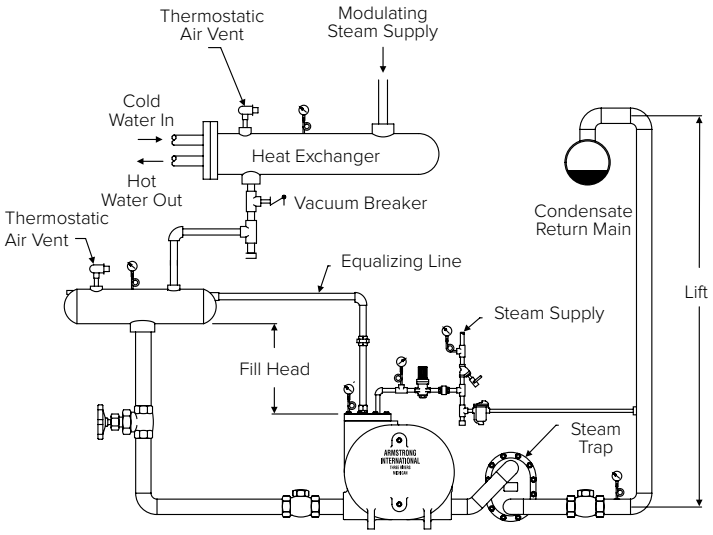

Draining steam coil or heat exchanger when pressure is lower than return line pressure. Note that a steam trap is not required in this application, as differential pressure is always negative. For more details, see installation and operation manuals.

CLOSED SYSTEMS

Applications exist where it is desirable to tie the vent line back into the heat exchange space, equalizing the pressure in the heat exchanger, reservoir/piping and the pump trap. This allows water to flow by gravity down to the pump where it can be returned. Valuable kJ remain within the system due to no flash steam loss to the atmosphere through the vent. Closed system applications can also be used to drain liquid from the equipment under a vacuum. See table CRE-240-2 for reservoir pipe sizing.

Note 1: If steam motive is used, the drip trap may be discharged into the return line or to the drain.

Note 2: Vent piping from the pump trap can be connected to the inlet side of the equipment being drained if the pressure drop across the equipment is less than 0,03 bar and there is a minimum of 600 mm of fill head present.

Note 3: A vacuum breaker might be installed to protect the heat exchanger if the vent piping from the pump trap is connected to the receiver. If the equipment modulated down to a sub-atmospheric condition, the vacuum breaker will open to equalize the system and provide adequate drainage.

Armstrong International SA • Parc Industriel des Hauts-Sarts (2e Avenue) • 4040 Herstal • Belgium
Tel.: +32 (0)4 240 90 90 • Fax: +32 (0)4 240 40 33
www.**armstrong**international.eu • info@**armstrong**international.eu

Double Duty® Typical Application

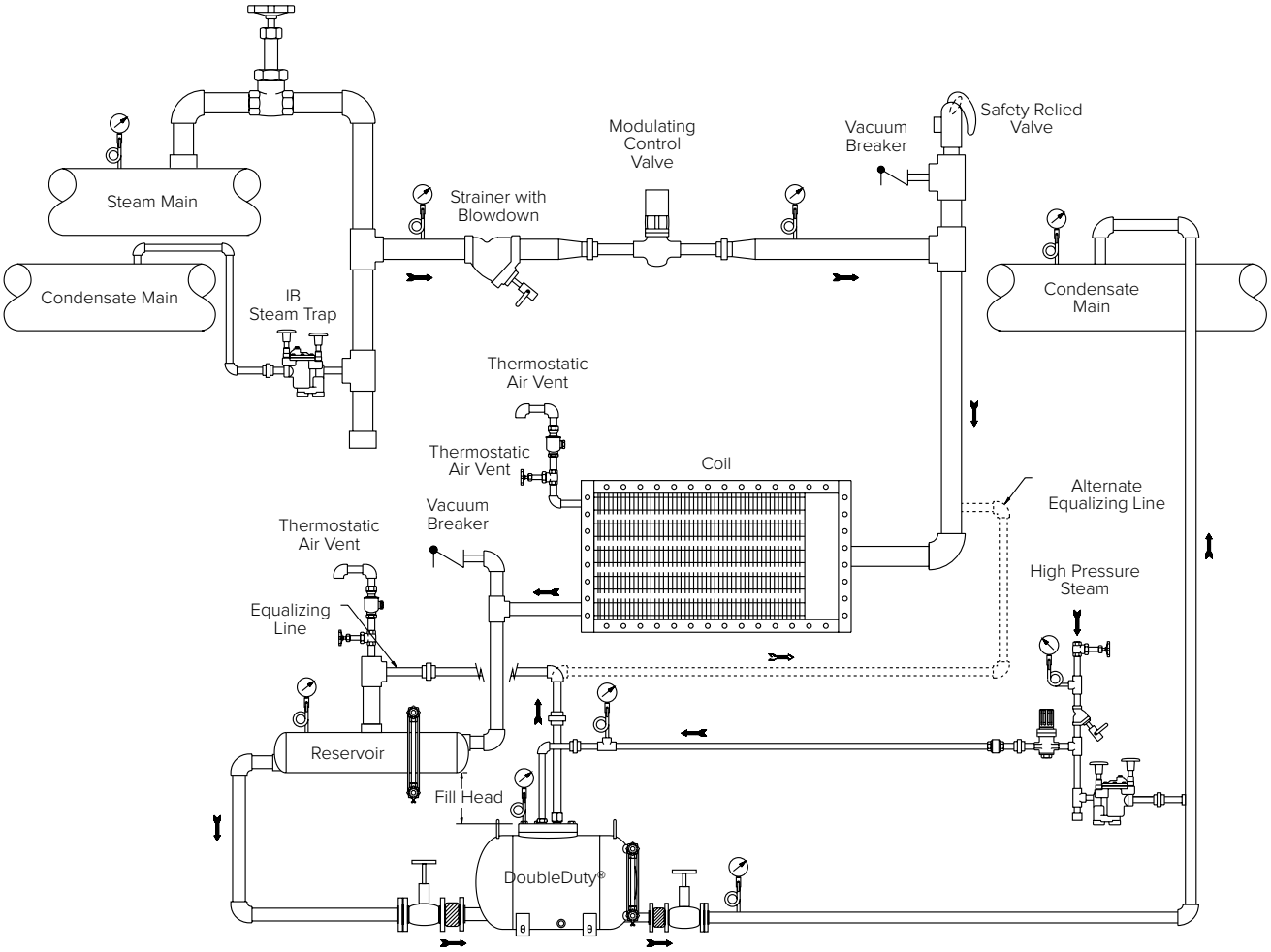

Common Applications for Condensate Armstrong Pump Traps

- Air Heating Coils
- Plate and Frame Heaters
- Jacketed Kettles
- Vacuum Space
- Flash Tanks
- Shell and Tube Heat Exchangers
- Absorption Chillers
- Low Pressure Applications

Any application using modulated control.

Condensate Drainage From Temperature Controlled Equipment

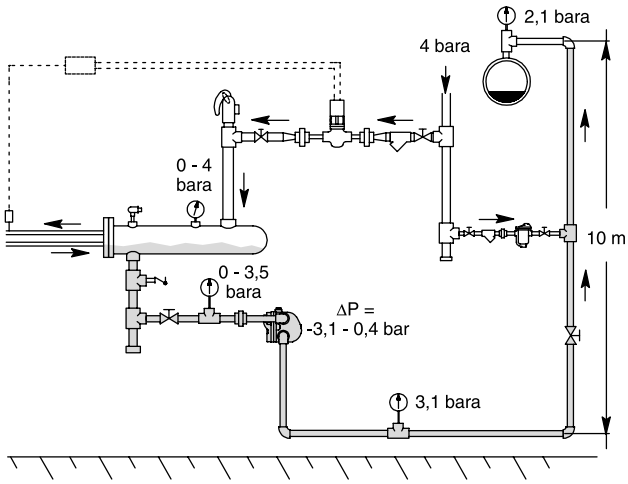

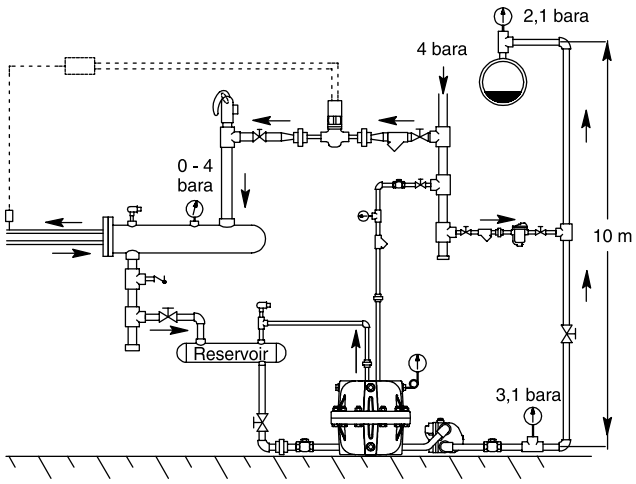

Problem: "Stall" Condition on Modulated Steam Control
Modulated steam controls are required to change steam pressure in the heat exchanger to control accurate product output temperature. Due to these varying steam pressure changes, a stall condition exists in all heat exchangers where condensate cannot flow through the steam trap due to insufficient or even negative pressure differential. Under the stall condition, partial or complete flooding will occur. Reference figure above noting the stall conditions and problems that can occur.

Armstrong Solution
The combination of Armstrong pump trap and Armstrong steam trap is the total solution to the stall condition by removing condensate under all system conditions. When the steam system pressure is sufficient to overcome the back pressure, the steam trap operates normally. When the system pressure falls to the stall condition, the pump trap operates and pumps condensate through the steam trap. Temperature control and condensate drainage are assured under all system conditions.

Note: The pump trap is sized for the stall conditions.

Problems

1. Stall condition – no condensate drainage due to insufficient pressure to move condensate through the steam trap
2. Heat exchange equipment floods causing equipment damage from:
   - Water hammer due to steam and condensate occupying the same space
   - Corrosion due to carbonic acid forming from sub-cooled condensate reabsorbing trapped carbon dioxide and non-condensable gases
3. Inaccurate temperature control

Stall Calculation

Use of the stall chart on right will determine the point where flooding will occur.

Application information required:		Example
Ps	= Max. Steam Pressure in heat exchanger	1 barg
ts	= Maximum Steam Temperature	120°C
Qs	= Maximum Steam Flow	1 000 kg/h
or		
Qs	= Total Power of Heat Exchanger (kW)	
Pb	= Back Pressure	0,3 barg
tb	= Corresponding temperature	107°C
t1	= Inlet Product Temperature	15°C
t2	= Outlet Product Temperature	60°C
Qcr	= Critical (Stall) Load	

Stall Calculation:

$$Qcr = \frac{tb - \Delta t}{ts - \Delta t} \times Qs$$

$$= \frac{107°C - 37{,}5°C}{120°C - 37{,}5°C} \times 1000 \text{ kg/h}$$

$$= \frac{62°C}{75°C} \times 1000 \text{ kg/h}$$

$$= 826 \text{ kg/h}$$

Stall Information:
- When the control valve allows more than 826 kg/h of steam to enter into the heat exchanger, **differential pressure will be positive**. Steam trap should be able to discharge 826 kg/h at 0,1 bar differential pressure.

- When the control valve allows less than 826 kg/h of steam to enter into the heat exchanger, **differential pressure will be negative**. Condensate pump should be able to discharge 826 kg/h with 1 barg motive pressure and 0,3 barg back pressure.

- If the heat exchanger is oversized by 20%, it would be able to handle up to 1 200 kg of steam per hour. The stall will appear at 84,25%, which means 1 011 kg/h. As only 1 000 kg/h are needed to heat the maximum product load at the maximum differential temperature, the pressure **differential will always be negative**. In that case, the steam trap is not needed (see closed systems on page CRE-226).

Armstrong International SA • Parc Industriel des Hauts-Sarts (2e Avenue) • 4040 Herstal • Belgium
Tel.: +32 (0)4 240 90 90 • Fax: +32 (0)4 240 40 33
www.**armstrong**international.eu • info@**armstrong**international.eu

Notes

EPT-104 Series Low Profile Pumping Trap

Cast Iron, In-Line or Same Side Connections

For capacities up to 900 kg/h (steam motive)... Discharge per cycle 7 liters

Condensate Recovery Equipment

The patented Armstrong EPT-104 Mini Pump Trap is one of the smallest non-electric solution that can move condensate or other liquids from lower to higher points and from lower to higher pressures. Condensate can be returned at temperatures well above the 99°C limit of conventional electric centrifugal pumps without the headaches of leaking seals or cavitation problems. The EPT-104 Mini Pump Trap is the small solution for a big problem.

Features

- Non-electric – Operates using inexpensive steam, air or inert gas
- Low maintenance – No leaking seals, impeller or motor problems, reducing maintenance and downtime
- Small and compact – Low profile body fits in tight space requirements while allowing minimal fill head
- Reduced installation cost – Single trade required for installation and maintenance
- Explosion proof – Standard unit intrinsically safe
- All stainless steel internals – Corrosion resistant with long service life
- Long-lasting Inconel X-750 springs

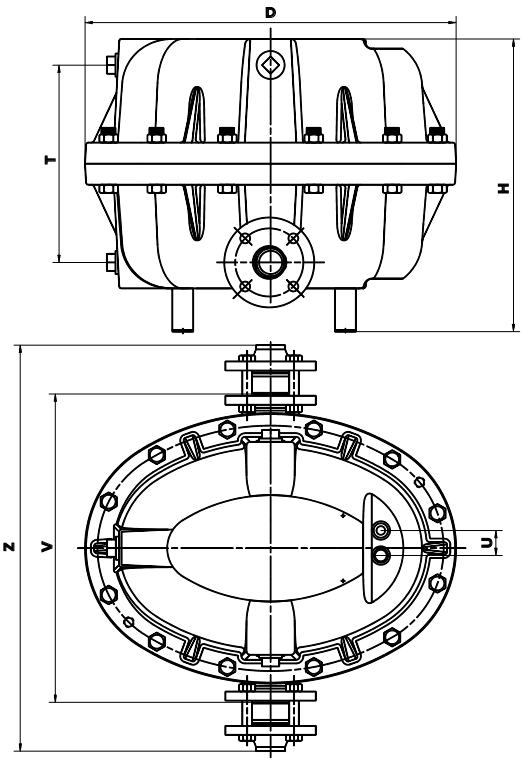

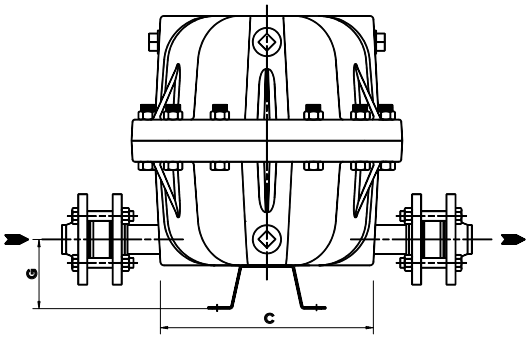

Table CRE-230-1. EPT-104 Pumping Trap Physical Data	
Model Number	**EPT-104**
	mm
«C»	273
«D»	470
«G»	125
«H»	400
«T»	256
«U»	32
«V»	435
«Z»	570
Cap Removal	150
Weight (kg)	66
Number of Cap Bolts	12
Maximum Operating Pressure	6 bar
Maximum Allowable Pressure (vessel design)	10 bar @ 232°C

This model is CE Marked according to the PED (2014/68/UE).

Table CRE-230-2. EPT-104 Pumping Trap Materials	
Body and Cap	Cast Iron ASTM A48 cl.30
Motive / Vent Valves	Stainless Steel
Mechanism Assembly	Cast Stainless Steel
Spring	Inconel X-750
Bolts	SA 449
Nuts	ASTM A194 Gr. 2H
Plug	Cast Iron
Gasket	Compresses Non-Asbestos

Table CRE-230-3. EPT-104 Pumping Trap Connection Sizes	
Inlet	DN 25
Inlet Check Valve	DN 25
Outlet	DN 25
Outlet Check Valve	DN 25
Motive Valve	1/2" NPT
Vent Valve	1/2" NPT
Gauge Glass	1" NPT
Cycle Counter	1" NPT

All dimensions and weights are approximate. Use certified print for exact dimensions. Design and materials are subject to change without notice.

Armstrong International SA • Parc Industriel des Hauts-Sarts (2e Avenue) • 4040 Herstal • Belgium
Tel.: +32 (0)4 240 90 90 • Fax: +32 (0)4 240 40 33
www.**armstrong**international.eu • info@**armstrong**international.eu

EPT-104 Series Low Profile Pumping Trap

Cast Iron, In-Line or Same Side Connections

For capacities up to 900 kg/h (steam motive)... Discharge per cycle 7 liters

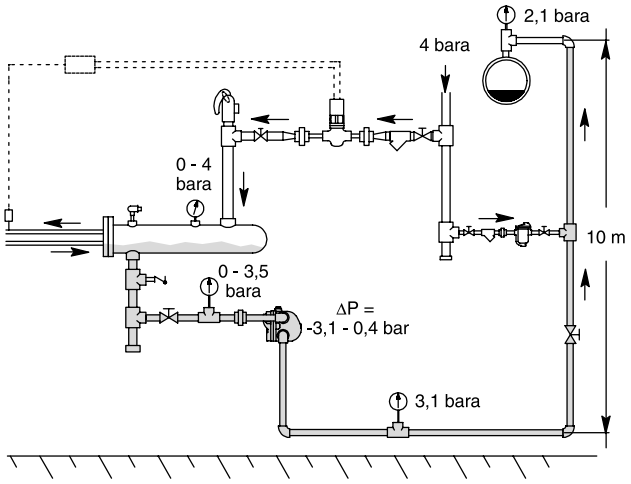

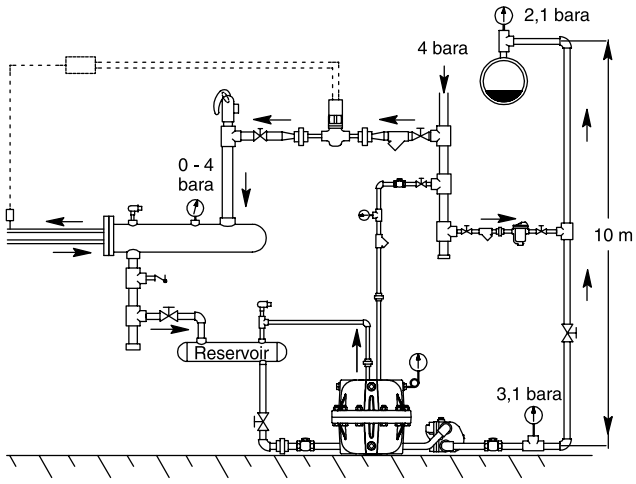

Big Problem = Maintenance Headache!

1. Space constraints – Heat exchanger equipment being low to the floor.
2. No condensate drainage – Back pressure exceeds system pressure.
3. Heat exchanger equipment floods, causing equipment damage from:
   - Water hammer – Steam and condensate occupying the same space
   - Corrosion – Non-condensable gases are reabsorbed into the condensate, forming carbonic acid
4. Production loss – Due to inaccurate temperature control.

Small Solution = Long, trouble-free service life for heat exchanger equipment due to condensate and non-condensable gas evacuation.

1. Small and compact – EPT-104 Mini Pump Trap fits in tight spaces.
2. Condensate drainage – Motive pressure to EPT-104 Mini Pump Trap provides enough pressure to lift condensate to return lines.
3. Heat exchanger is free and clear of condensate due to proper drainage, provided by the EPT-104 Mini Pump Trap.
4. Accurate temperature control providing less product loss.

Table CRE-231-1. EPT-104 Capacity Conversion Factors for Other Fill Heads

Filling Head (mm)	0	150	300	600 or greater
EPT-104	0,7	1,0	1,2	Consult factory

Note: Filling head is measured from drain of receiver to top of pump's cap.

Options

- Gauge Glass Assembly with Guards (Brass or Cadium Plated Carbon Steel)
- Digital Cycle Counter (Open or Closed Systems; with or without Auxiliary contacts)
- Insulation Jacket

This pump might be suitable for special applications. Please consult factory.

Table CRE-231-2.E PT-104 Pumping Trap Capacities (150 mm Filling Head)

Motive Pressure	Total Lift or Back Pressure	Steam Motive	Air Motive
bar	bar	kg/h	kg/h
1,0	0,35	510	950
1,7		590	1 000
3,5		705	1 030
5,0		750	1 045
1,7	1,0	295	860
3,5		320	930
5,0		340	950
2,5	1,5	180	815
3,5		205	880
5,0		230	930
3,5	3,0	115	735
5,0		135	825

Note: Above capacities are the results of **actual** steam testing using a minimum 93°C condensate. Published capacities are based on the use of external check valves supplied by Armstrong. Fill head measured from drain point to top of pump case. Discharge per cycle 7 liters.

EPT-200 Series Pumping Trap

Carbon Steel, Same Side Connections

For capacities up to 2 620 kg/h (steam motive)... Discharge per cycle 19 liters

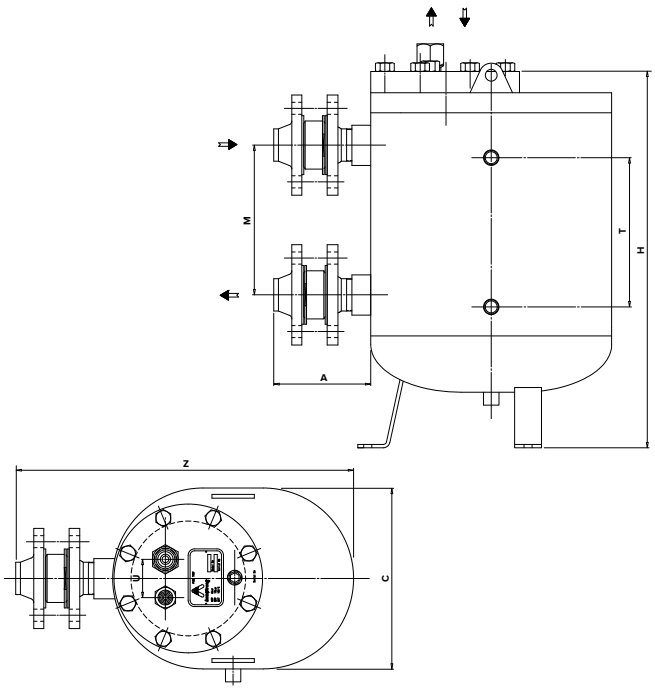

The Armstrong EPT-200 Series Vertical Pumping Trap is a low maintenance, non-electric solution to move condensate or other liquids from low points, low pressures or vacuum spaces to an area of higher elevation or pressure. Condensate can be returned well above the 99°C limit of conventional electric condensate pumps without the headaches of leaking seals or cavitation problems.

Features

- Non-electric – Uses inexpensive steam, air or gas to operate the pump trap
- Low profile – For tight space requirements (min. 550 mm)
- Explosion proof – Intrinsically safe
- Durable carbon steel body for long service life
- Low maintenance – No leaking seals, impeller or motor problems
- All stainless steel internals with durable Inconel X-750 springs
- Externally removable/replaceable seats – Valve and seats can be replaced or cleaned without removing pump cap from body

Table CRE-232-1. EPT-200 Pumping Trap Physical Data

Model Number	EPT-204	EPT-206
	mm	mm
«C»	270	270
«H»	550	550
«T»	224	224
«U»	57	57
«M»	224	224
«A»	129	145
«Z»	489	505
Cap Removal	400	400
Weight (kg)	50	51
Number of Cap Bolts	8	8

Maximum Allowable Pressure (Vessel Design) 10 barg @ 250°C.
Maximum Operating Pressure 9 barg.
All models are CE Marked according to the PED (2014/68/UE).

All dimensions and weights are approximate. Use certified print for exact dimensions. Design and materials are subject to change without notice.

Armstrong International SA • Parc Industriel des Hauts-Sarts (2e Avenue) • 4040 Herstal • Belgium
Tel.: +32 (0)4 240 90 90 • Fax: +32 (0)4 240 40 33
www.**armstrong**international.eu • info@**armstrong**international.eu

EPT-200 Series Pumping Trap

Carbon Steel, Same Side Connections

For capacities up to 2 620 kg/h (steam motive)... Discharge per cycle 19 liters

Table CRE-233-1. EPT-200 Pumping Trap Materials	
Body and Cap	Fabricated Steel ASME VIII division I - ASTM A106 GrB / ASTM A516 Gr60 / ASTM A105
Cap Gasket	Compressed Non-Asbestos
Bolts	SA - 193 gr B7
Inlet Valve Assembly	Stainless Steel
Vent Valve Assembly	Stainless Steel
Valve Assembly Washers	Zinc-Plated Steel
Mechanism Assembly	Cast Stainless Steel
Plug	Steel
Springs	Inconel X-750

Table CRE-233-2. EPT-200 Pumping Trap Connection Sizes		
	EPT-204	EPT-206
Inlet	DN 25	DN 40
Inlet Check Valve	DN 25	DN 40
Outlet	DN 25	DN 40
Outlet Check Valve	DN 25	DN 40
Motive Valve	1/2" BSPT	
Vent Valve	1" BSPT	
Body Drain	1/2" NPT	
Gauge Glass	1/2" BSPT	
Cycle Counter	1/2" BSPT	

Table CRE-233-3. EPT-200 Pumping Trap Capacities (300 mm Filling Head)

Motive Pressure	Total Lift or Back Pressure	EPT-204 DN 25 x DN 25		EPT-206 DN 40 x DN 40	
		Steam	Air	Steam	Air
bar	bar	kg/h	kg/h	kg/h	kg/h
1,0	0,35	980	1 145	1 470	1 635
1,7		1 105	1 250	1 740	1 905
3,5		1 200	1 360	1 850	1 960
5,0		1 240	1 470	1 905	2 015
7,0		1 290	On request	1 960	On request
8,5		1 320	On request	2 015	On request
1,7	1,0	815	1 090	1 305	1 470
3,5		1 090	1 225	1 740	1 850
5,0		1 145	1 360	1 795	1 905
7,0		1 180	On request	1 825	On request
8,5		1 200	On request	1 850	On request
2,5	1,5	820	925	1 150	1 250
3,5		930	1 090	1 310	1 415
5,0		1 050	1 250	1 470	1 580
7,0		1 130	On request	1 600	On request
8,5		1 275	On request	1 650	On request
3,5	3,0	760	925	850	1 090
4,0		815	1 090	1 090	1 250
5,0		925	1 200	1 250	1 360
7,0		980	On request	1 375	On request
8,5		1 045	On request	1 430	On request
4,5	4,0	625	1 090	750	1 090
5,0		720	1 250	900	1 250
7,0		900	On request	1 200	On request
8,5		935	On request	1 280	On request

Note: Above capacities are the results of **actual** steam testing using a minimum 93°C condensate. Published capacities are based on the use of external check valves supplied by Armstrong. Fill head measured from drain point to top of pump cap. Discharge per cycle: 19 liters.
Shadow shows cells used for the selection example on page CRE-225.

Table CRE-233-4. EPT-200 Capacity Conversion Factors for other Fill Heads

Model	Filling Head (mm)				
	0	150	300	600	900
EPT-204	0,65	0,90	1,00	1,20	1,30
EPT-206	0,65	0,90	1,00	1,20	1,30

Note: Filling head is measured from drain of receiver to top of pump's cap.

Options

- Gauge Glass Assembly with Guards (Brass or Cadium Plated Carbon Steel)
- Digital Cycle Counter (Open or Closed Systems; with or without Auxiliary contacts)
- Insulation Jacket

This pump might be suitable for special applications. Please consult factory

All dimensions and weights are approximate. Use certified print for exact dimensions. Design and materials are subject to change without notice.

EPT-400 Series Pumping Trap

Carbon Steel, In-Line Connections

For capacities up to 7 310 kg/h (steam motive)... Discharge per cycle 29 liters

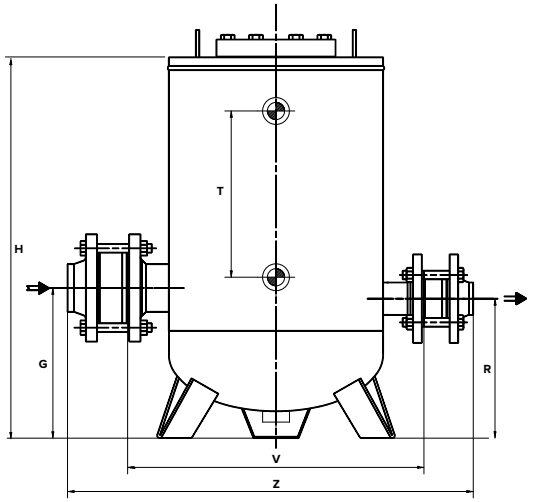

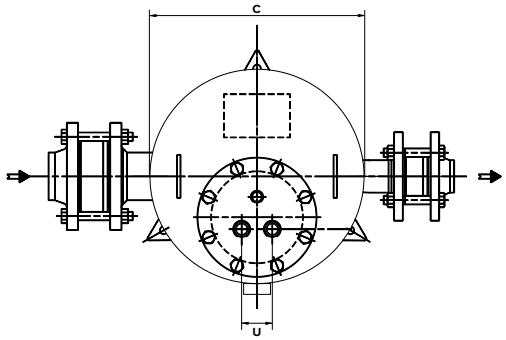

The Armstrong EPT-400 Series Vertical Pump Trap is the low maintenance, non-electric solution to move condensate or other liquids from low points, low pressures or vacuum spaces to an area of higher elevation or pressure. Condensate can be returned at temperatures well above the 99°C limit of conventional electric condensate pumps without the headaches of leaking seals or cavitation problems.

Features

- Non-electric – Uses inexpensive steam, air or gas to operate the pump trap
- Explosion proof – Intrinsically safe
- AD-Merkblätter carbon steel or stainless steel body vessel
- Low maintenance – No leaking seals, impeller or motor problems
- All stainless steel internals with durable Inconel X-750 springs
- Externally removable/replaceable seats – Valve and seats can be replaced or cleaned without removing pump cap from body

Table CRE-234-1. EPT-400 Pumping Trap Physical Data

Model Number	EPT-404	EPT-406	EPT-408	EPT-412
	mm	mm	mm	mm
«C» (diameter)	400	400	400	400
«G»	260	260	260	260
«H»	710	710	710	710
«R»	240	240	240	240
«T»	305	305	305	305
«U»	57	57	57	57
«V»	552	552	552	552
«Z»	680	710	730	750
Cap Removal	400	400	400	400
Weight (kg)	67	71	75	88
Number of Cap Bolts	8	8	8	8

Maximum Allowable Pressure (Vessel Design) 10 barg @ 250°C.
Maximum Operating Pressure 9 barg.
All models are CE Marked according to the PED (2014/68/UE).

All dimensions and weights are approximate. Use certified print for exact dimensions. Design and materials are subject to change without notice.

Armstrong International SA • Parc Industriel des Hauts-Sarts (2e Avenue) • 4040 Herstal • Belgium
Tel.: +32 (0)4 240 90 90 • Fax: +32 (0)4 240 40 33
www.**armstrong**international.eu • info@**armstrong**international.eu

EPT-400 Series Pumping Trap

Carbon Steel, In-Line Connections

For capacities up to 7 310 kg/h (steam motive)... Discharge per cycle 29 liters

Table CRE-235-1. EPT-400 Pumping Trap Connection Sizes

	EPT-404	EPT-406	EPT-408	EPT-412
Inlet	DN 25	DN 40	DN 50	DN 80
Inlet Check Valve	DN 25	DN 40	DN 50	DN 80
Outlet	DN 25	DN 40	DN 50	DN 50
Outlet Check Valve	DN 25	DN 40	DN 50	DN 50
Motive Valve	1/2" BSPT			
Vent Valve	1" BSPT			
Body Drain	1/2" NPT			
Gauge Glass	1/2" BSPT			
Cycle Counter	1/2" BSPT			

Table CRE-235-2. EPT-400 Pumping Trap Materials

Body and Cap	Fabricated Carbon Steel ASME VIII division I - ASTM A106 GrB / ASTM A516 Gr60 / ASTM A105
Cap Gasket	Compressed Non-Asbestos
Bolts	SA - 193 gr B7
Inlet Valve Assembly	Stainless Steel
Vent Valve Assembly	Stainless Steel
Valve Assembly Washers	Zinc-Plated Steel
Mechanism Assembly	Cast Stainless Steel
Plug	Steel
Springs	Inconel X-750

Table CRE-235-3. EPT-400 Pumping Trap Capacities (300 mm Filling Head)

Motive Pressure	Total Lift or Back Pressure	EPT-404		EPT-406		EPT-408		EPT-412	
		DN 25 x DN 25		DN 40 x DN 40		DN 50 x DN 50		DN 80 x DN 50	
		Steam	Air	Steam	Air	Steam	Air	Steam	Air
bar	bar	kg/h	kg/h	kg/h	kg/h	kg/h	kg/h	kg/h	kg/h
1,0	0,35	945	1 120	1 545	1 670	2 245	2 420	3 740	4 045
1,7		1 250	1 320	2 290	2 430	3 295	3 495	5 490	5 815
3,5		1 545	1 610	2 440	2 454	3 540	3 680	5 840	6 060
5,0		1 695	1 750	2 595	2 645	3 590	3 695	5 990	6 160
7,0		1 750	On request	2 695	On request	3 640	On request	6 040	On request
8,5		1 800	On request	2 745	On request	3 695	On request	6 090	On request
1,7	1,0	1 100	1 260	1 750	2 010	2 695	3 090	3 590	4 130
3,5		1 300	1 400	2 045	2 210	3 145	3 395	5 190	5 615
5,0		1 400	1 475	2 195	2 370	3 245	3 445	5 390	5 715
7,0		1 545	On request	2 400	On request	3 345	On request	5 490	On request
8,5		1 595	On request	2 440	On request	3 395	On request	5 590	On request
2,5	1,5	1 000	1 170	1 445	1 710	2 095	2 470	3 445	4 070
3,5		1 200	1 335	2 000	2 245	2 895	3 195	4 840	5 410
5,0		1 300	1 400	2 145	2 270	2 990	3 245	4 990	5 440
7,0		1 400	On request	2 345	On request	3 050	On request	5 090	On request
8,5		1 450	On request	2 980	On request	3 195	On request	5 190	On request
3,5	3,0	945	1 170	1 595	2 025	2 170	2 675	2 895	3 555
4,0		1 100	1 300	1 800	2 125	2 545	3 000	3 445	4 070
5,0		1 200	1 335	2 000	2 235	2 845	3 185	3 790	4 240
7,0		1 250	On request	2 095	On request	2 990	On request	4 045	On request
8,5		1 350	On request	2 245	On request	3 095	On request	4 240	On request
4,5	4,0	900	1 200	1 595	2 145	1 900	2 520	2 500	3 315
5,0		1 000	1 220	1 750	2 320	2 045	2 580	2 695	3 445
7,0		1 360	On request	1 850	On request	2 245	On request	2 995	On request
8,5		1 200	On request	1 900	On request	2 395	On request	3 195	On request

Note: Above capacities are the results of **actual** steam testing using a minimum 93°C condensate. Published capacities are based on the use of external check valves supplied by Armstrong. Fill head measured from drain point to top of pump cap. Discharge per cycle: 29 liters.

Table CRE-235-4. EPT-400 Capacity Conversion Factors for Other Fill Heads

Model	Filling Head (mm)				
	0	150	300	600	900
EPT-404	0,70	0,85	1,00	1,30	1,40
EPT-406	0,70	0,85	1,00	1,20	1,35
EPT-408	0,70	0,70	1,00	1,20	1,35
EPT-412	0,70	0,85	1,00	1,08	1,20

Note: Filling head is measured from drain of receiver to top of pump's cap.

Options

- Stainless 316L Body and Cap
- Gauge Glass Assembly with Guards (Brass or Cadium Plated Carbon Steel)
- Digital Cycle Counter (Open or Closed Systems; with or without Auxiliary contacts)
- Insulation Jacket

This pump might be suitable for special applications. Please consult factory

All dimensions and weights are approximate. Use certified print for exact dimensions. Design and materials are subject to change without notice.

EPT-300 Series Pumping Trap

Carbon Steel, In-Line Connections

For capacities up to 9 040 kg/h (steam motive)... Discharge per cycle 45 liters

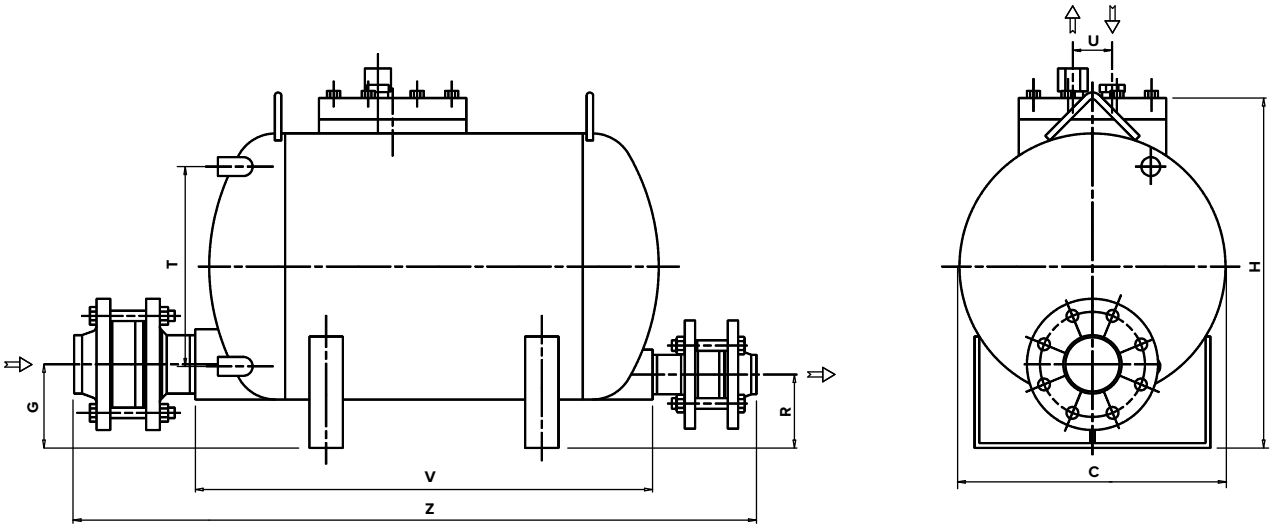

The Armstrong EPT-300 Series Horizontal, Low Profile Pump Trap is the low maintenance non-electric solution to move condensate or other liquids from low points, low pressures or vacuum spaces to an area of higher elevation or pressure. Condensate can be returned at temperatures well above the 99°C limit of conventional electric condensate pumps without the headaches of leaking seals or cavitation problems.

Features

- Non-electric – Uses inexpensive steam, air or gas to operate the pump trap
- Low profile – For tight space requirements
- High capacity – Provides highest capacity in the industry, moving 45 liters per pump cycle
- Explosion proof – Intrinsically safe
- ASME code stamped 150/300 carbon steel or stainless steel body vessel
- Low maintenance – No leaking seals, impeller or motor problems
- All stainless steel internals with durable Inconel X-750 springs
- Externally removable/replaceable seats – Valve and seats can be replaced or cleaned without removing pump cap from body

Table CRE-236-1. EPT-300 Pumping Trap Physical Data

Model Number	EPT-308	EPT-312
	mm	mm
«C» (diameter)	406	406
«G»	125	140
«H»	534	534
«R»	125	125
«T»	305	305
«U»	57	57
«V»	700	700
«Z»	1 017	1 045
Cap Removal	400	400
Weight (kg)	77	87
Number of Cap Bolts	8	8

Maximum Allowable Pressure (Vessel Design) 10 barg @ 250°C.
Maximum Operating Pressure 9 barg.
All models are CE Marked according to the PED (2014/68/UE).

All dimensions and weights are approximate. Use certified print for exact dimensions. Design and materials are subject to change without notice.

Armstrong International SA • Parc Industriel des Hauts-Sarts (2e Avenue) • 4040 Herstal • Belgium
Tel.: +32 (0)4 240 90 90 • Fax: +32 (0)4 240 40 33
www.**armstrong**international.eu • info@**armstrong**international.eu

EPT-300 Series Pumping Trap

Carbon Steel, In-Line Connections

For capacities up to 9 040 kg/h (steam motive)... Discharge per cycle 45 liters

Table CRE-237-1. EPT-300 Pumping Trap Materials

Body and Cap	Fabricated Carbon Steel ASME VIII division I - ASTM A106 GrB / ASTM A516 Gr60 / ASTM A105
Cap Gasket	Compressed Non-Asbestos
Bolts	SA - 193 gr B7
Inlet Valve Assembly	Stainless Steel
Vent Valve Assembly	Stainless Steel
Valve Assembly Washers	Zinc-Plated Steel
Mechanism Assembly	Cast Stainless Steel
Plug	Steel
Springs	Inconel X-750

Table CRE-237-2. EPT-300 Pumping Trap Connection Sizes

	EPT-308	EPT-312
Inlet	DN 50	DN 80
Inlet Check Valve	DN 50	DN 80
Outlet	DN 50	DN 50
Outlet Check Valve	DN 50	DN 50
Motive Valve	1/2" BSPT	
Vent Valve	1" BSPT	
Gauge Glass	1/2" NPT	
Cycle Counter	1/2" NPT	

Table CRE-237-3. EPT-300 Pumping Trap Capacities (300 mm Filling Head)

Motive Pressure	Total Lift or Back Pressure	EPT-308 DN 50 x DN 50		EPT-312 DN 80 x DN 50	
		Steam	Air	Steam	Air
bar	bar	kg/h	kg/h	kg/h	kg/h
1,0	0,35	3 130	4 175	4 080	5 580
1,7		4 620	4 945	5 990	6 440
3,5		4 810	5 035	6 850	7 170
5,0		4 900	5 125	6 940	7 305
7,0		5 080	On request	7 030	On request
8,5		5 260	On request	7 530	On request
1,7	1,0	3 175	4 580	4 080	5 080
3,5		4 355	4 945	5 805	6 260
5,0		4 875	5 035	6 440	6 805
7,0		4 945	On request	6 485	On request
8,5		5 130	On request	6 850	On request
2,5	1,5	3 220	4 175	3 675	5 215
3,5		3 765	4 630	4 630	5 785
5,0		4 580	4 990	5 670	6 125
7,0		4 630	On request	5 760	On request
8,5		4 670	On request	5 900	On request
3,5	3,0	2 585	3 450	2 995	4 445
4,0		2 995	3 990	3 810	4 760
5,0		3 450	4 580	4 445	5 760
7,0		3 810	On request	4 580	On request
8,5		4 265	On request	4 670	On request
4,5	4,0	2 040	3 175	2 720	4 630
5,0		2 130	3 220	2 905	4 720
7,0		2 905	On request	3 220	On request
8,5		2 995	On request	3 360	On request

Note: Above capacities are the results of **actual** steam testing using a minimum 93°C condensate. Published capacities are based on the use of external check valves supplied by Armstrong. Fill head measured from drain point to top of pump cap. Discharge per cycle: 45 liters.

Table CRE-237-4. EPT-300 Capacity Conversion Factors for Other Fill Heads

Model	Filling Head (mm)				
	0	150	300	600	900
EPT-308	0,70	0,90	1,00	1,20	1,30
EPT-312	0,70	0,85	1,00	1,08	1,20

Note: Filling head is measured from drain of receiver to top of pump's cap.

Options

- Gauge Glass Assembly with Guards (Brass or Cadium Plated Carbon Steel)
- Digital Cycle Counter (Open or Closed Systems; with or without Auxiliary contacts)
- Insulation Jacket

This pump might be suitable for special applications. Please consult factory

All dimensions and weights are approximate. Use certified print for exact dimensions. Design and materials are subject to change without notice.

EPT-516 High Capacity Pumping Trap

Carbon Steel, In-Line Connections

For capacities up to 35 920 kg/h (steam motive)... Discharge per cycle 475 liters

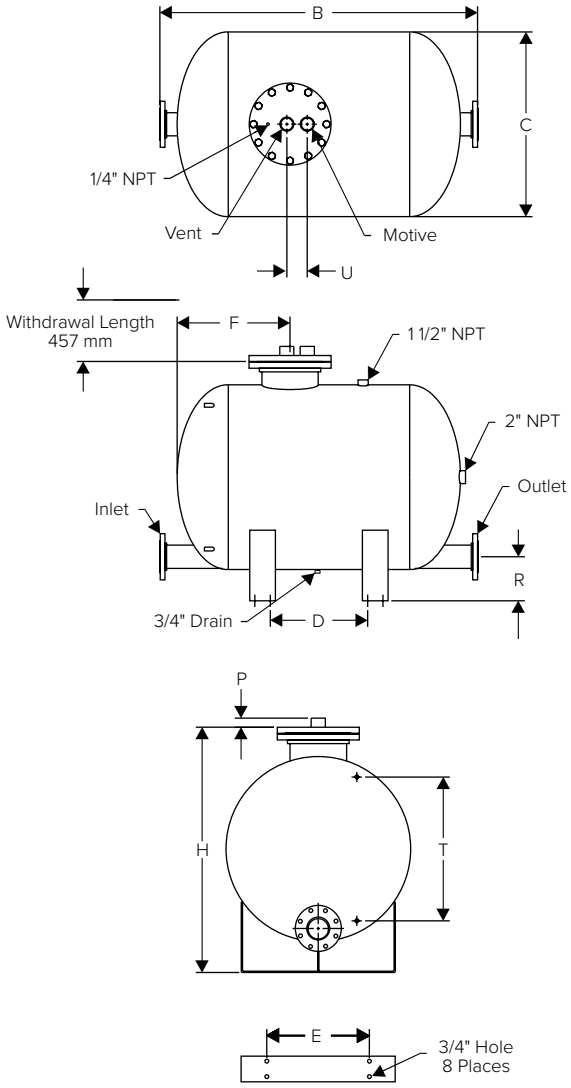

Effective recovery and return of hot condensate are essential to overall plant efficiency while conserving energy. Large amounts of condensate provide the best opportunities to save energy.

The Armstrong EPT-516 High Capacity Pump Trap is the low maintenance, non-electric solution to moving large amounts of condensate and other liquids from low points, low pressures or vacuum spaces to an area of higher elevation or pressure. Condensate can be returned at temperatures well above the 99°C limit of conventional electric pumps without the headaches of leaking seals or cavitation.

Features

- Non-electric – Uses inexpensive steam, air or gas to operate the pump trap
- No leaking seals/packings, impeller wear, electrical or motor problems – Reduces maintenance and downtime
- Single trade installation or repair reduces installation and maintenance costs
- Direct spring/float actuated mechanism – No maintenance intensive diaphragm operated valve mechanism
- Compression spring design – Reduces downtime, ensures performance and reliability
- Rugged stainless steel internals – Durable and corrosion resistant for enhanced service life
- Closed loop – No motive steam or flash steam loss, therefore capturing and returning all valuable kJ back to the system (see General Applications on page CRE-226)
- Safety – Pump can be placed in flooded pits without fear of electrocution or circuit breaker defaults
- Explosion proof – Standard unit intrinsically safe without additional cost

Table CRE-238-1. EPT-516 Pumping Trap Physical Data

	mm
Inlet Connection	4" 150# ANSI Flg. - DN100 PN40
Outlet Connection	4" 150# ANSI Flg. - DN100 PN40
Motive Connection	2" NPT
Vent Connection	2" NPT
Gauge Glass Connection	1/2" NPT
«B»	1 574
«C»	914
«D»	484
«E»	508
«F»	559
«H»	1 219
«P»	44
«R»	222
«T»	711
«U»	100
Weight	366
Number of Bolts	12

Maximum Operating Pressure on standard unit: 10 barg.
For higher pressure, please consult factory.
Maximum Allowable Pressure (standard vessel design): 10 barg @ 250°C.
21 barg vessel available upon request.
This model is CE Marked according to the PED (2014/68/UE).

All dimensions and weights are approximate. Use certified print for exact dimensions. Design and materials are subject to change without notice.

Armstrong International SA • Parc Industriel des Hauts-Sarts (2e Avenue) • 4040 Herstal • Belgium
Tel.: +32 (0)4 240 90 90 • Fax: +32 (0)4 240 40 33
www.**armstrong**international.eu • info@**armstrong**international.eu

EPT-516 High Capacity Pumping Trap

Carbon Steel, In-Line Connections

For capacities up to 35 920 kg/h (steam motive)... Discharge per cycle 475 liters

Typical Applications

- Low pressure heating systems
- Process heat exchanger or coils with modulating steam control
- Remote installations (tracing, tank farms or remote coils)
- Systems under vacuum
- Hazardous (explosion proof) areas
- Caustic environments
- Sumps or submersed areas

Table CRE-239-1. EPT-516 Pumping Trap Materials

Name of Part	Description
Cap, Body, Bolting	Fabricated Carbon Steel ASME VIII division I - ASTM A106 GrB / ASTM A516 Gr60 / ASTM A105
Cap Gasket	Compressed Non-Asbestos
Inlet Valve Assembly	Stainless Steel
Vent Valve Assembly	Stainless Steel
Mechanism Assembly: Frame, Float & Spring	Stainless Steel

Note: 21 bar ASME vessel available upon request. EPT-516 available in all stainless steel. Consult factory.

Armstrong EPT-516 Pump Trap Sizing and Selection

Table CRE-239-2. EPT-516 Pumping Trap Capacities (600 mm Filling Head)

Motive Pressure	Total Lift or Back Pressure	EPT-516 4" x 4" Steam	EPT-516 4" x 4" Air
bar	bar	kg/h	kg/h
1,0	0,35	13 150	26 160
1,7		16 870	28 110
3,5		21 925	30 750
5,0		24 890	32 300
7,0		26 975	33 400
10,0		29 930	On request
1,7	1,0	16 670	23 055
3,5		20 520	26 338
5,0		23 180	28 258
7,0		25 275	29 620
10,0		28 570	On request
2,5	1,5	13 260	20 990
3,5		15 170	23 140
5,0		17 500	25 575
7,0		19 275	27 305
10,0		21 965	On request
3,5	3,0	11 900	18 725
4,0		12 420	19 990
5,0		13 055	21 535
7,0		13 870	23 530
10,0		15 025	On request
4,5	4,0	11 790	14 540
5,0		11 975	15 215
7,0		12 730	18 590
10,0		13 800	On request
7,0	5,5	10 837	15 827
8,5		10 991	On request
10,0		11 145	On request

Note: Above capacities are the results of **actual** steam testing using a minimum 93°C condensate. Published capacities are based on the use of external check valves supplied by Armstrong. Discharge per cycle: 475 liters.

Table CRE-239-3. EPT-516 Capacity Conversion Factors for Other Fill Heads

Model	Filling Head (mm) 0	150	300	400	600	900
EPT-516	0,7	0,75	0,8	0,85	1,0	1,08

Note: Filling head is measured from drain of receiver to top of pump's cap.

Options

- Gauge Glass Assembly with Guards (Brass or Carbon Steel, Cadium Plated)
- Digital Cycle Counter (Open or Closed Systems; with or without Auxiliary contacts)
- Insulation Jacket

This pump might be suitable for special applications. Please consult factory

Application Data

1. Fluid to be pumped:.....
2. Temperature of fluid to be pumped: .....☐ °C
3. Specific gravity: .....
4. Required flow rate: .....☐ m^3/h ☐ kg/h
5. Equipment pressure: .....☐ Modulation
   Min. ..... to Max. .....☐ bar
6. Fill head distance (A): .....☐ mm
7. Discharge condensate return line size: .....☐ mm
8. Motive gas: .....☐ Steam ☐ Air ☐ Gas
9. Motive pressure available: .....☐ bar ☐ Other.....
10. Return line pressure: .....☐ bar ☐ Other.....
11. Vertical lift (H): .....☐ m
12. Can pump be vented to atmosphere? .....☐ Yes ☐ No
13. Is there a condensate reservoir? .....☐ Yes ☐ No
    If yes, what size?.....
14. Is reservoir vented? .....☐ Yes ☐ No
15. Would you like Armstrong to quote on a packaged pre-piped engineered system?☐ Yes ☐ No

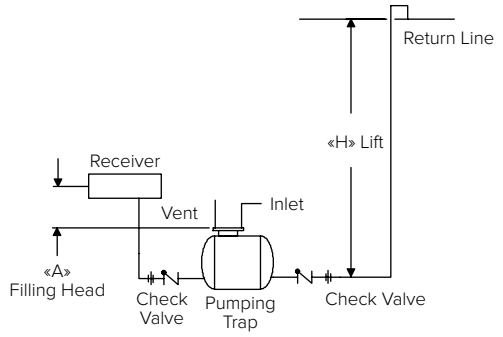

Reservoir and Vented Receiver Sizing – EPT-200/400/300, EPT-104

Table CRE-240-1. Inlet Reservoir Pipe Sizing for Closed Systems

Condensate Load	Reservoir Pipe Diameter					
kg/h	2"	3"	4"	6"	8"	10"
	Length of Pipe					
	mm	mm	mm	mm	mm	mm
230	1 200	700	400			
450	1 400	600	400			
680	2 100	900	600			
900	2 700	1 200	700			
1 140	3 400	1 500	900	500		
1 360	4 100	1 800	1 100	600		
1 820	5 500	2 600	1 500	700		
2 270		3 000	1 800	900	400	
2 720		3 700	2 100	1 100	600	
3 180		4 400	2 600	1 200	600	
3 630		5 000	2 900	1 400	700	400
4 080			3 400	1 500	900	600
4 540			3 700	1 700	900	600
4 990			4 000	1 800	1 100	600
5 440			4 300	2 000	1 200	700

Note: When draining condensate from a single piece of equipment in a **closed system**, to achieve maximum energy efficiency a reservoir should be installed horizontally above and ahead of the pump trap. Sufficient reservoir volume is required above the filling head level to hold condensate during the pump trap discharge cycle. The chart above shows the minimum reservoir sizing, based on the condensate load, to prevent equipment flooding during the pump trap discharge cycle.

Table CRE-240-2. Vented Receiver Sizing for Open Systems

Flash Steam	Receiver Diameter	Receiver Length	Vent Line Diameter
kg/h	in	mm	in
35	4"	900	1 1/2"
70	6"	900	2"
140	9"		2 1/2"
270	10"		3"
410	12"		4"
540	16"		6"
910	20"		8"

Note: When draining from single or multiple pieces of equipment in an **open system**, a vented receiver should be installed horizontally above and ahead of the pump trap. In addition to sufficient holding volume of the condensate above the fill head of the pump trap to hold the condensate during the pump trap cycle, the receiver must also be sized to allow enough area for flash steam and condensate separation. An overflow could also be added when required. The minimum recommended water seal is 300 mm. This table shows proper receiver tank sizing based on flash steam present. See the chart at right to calculate the percentage of flash steam at a given pressure drop.

Percentage of Flash Steam Formed When Discharging Condensate to Reduce Pressure

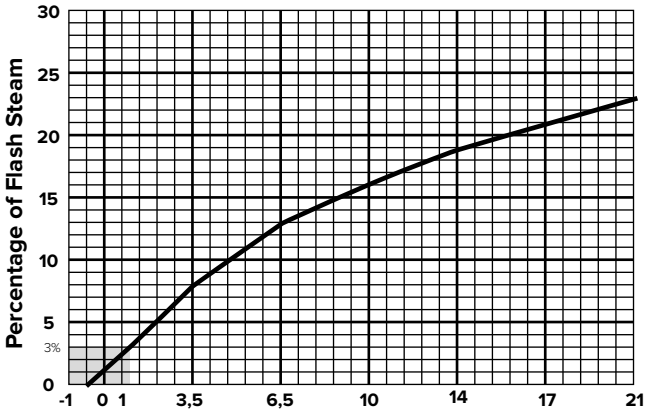

Note: Back pressure = 0 barg

All dimensions and weights are approximate. Use certified print for exact dimensions. Design and materials are subject to change without notice.

Armstrong International SA • Parc Industriel des Hauts-Sarts (2e Avenue) • 4040 Herstal • Belgium
Tel.: +32 (0)4 240 90 90 • Fax: +32 (0)4 240 40 33
www.**armstrong**international.eu • info@**armstrong**international.eu

Reservoir and Vented Receiver Sizing – EPT-516 Series High Capacity

Either a closed reservoir pipe or a vented receiver is required for proper condensate storage during the pump-down cycle of the pumping trap. Refer to the tables for sizing.

For Closed Reservoir Piping

1. Determine condensate load.
   Example 13 500 kg/h:
   - Reference the Inlet Reservoir Pipe table top right. Find the 13 500 kg/h condensate load in column one. Move across the columns to find the proper pipe sizing.

For Vented Receiver Sizing

1. Determine the pressure from where the condensate is being discharged.
2. Determine condensate load.
   - Reference the chart below to find the pressure that corresponds with the discharge condensate pressure.
     For this example, use 1 barg.
   - Follow 1 barg to where it intersects the "0" barg curve.
   - Move to the left from intersecting lines for the percentage of flash that will be created.
     For this example, it will be 3%.
   - Multiply the 3% by the condensate load.
     For this example, it is 13 500 kg/h.
     Thus, 13 500 x 0,03 = 405 kg/h of flash steam.

Using the Vented Receiver table bottom right, find the amount of flash steam in column one. Follow the table across to determine the sizing of the vented receiver.

Percentage of Flash Steam Formed When Discharging Condensate to Reduce Pressure

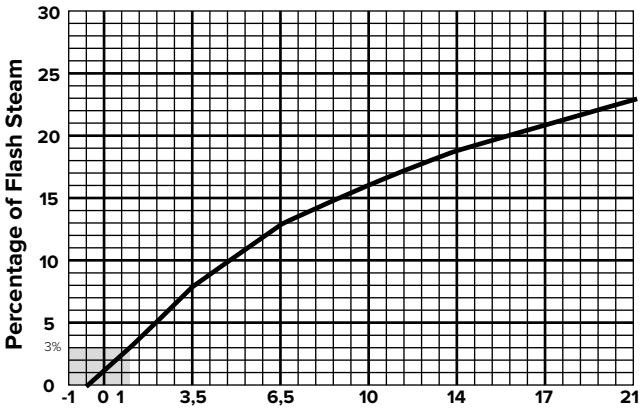

Bar from which condensate is discharged
Note: Back pressure = 0 barg

Table CRE-241-1. EPT-516 Inlet Reservoir Pipe Sizing for Closed Systems

Condensate Load kg/h	Reservoir Pipe Diameter (in)					
	8"	10"	12"	16"	20"	24"
up to	Length of Pipe (meter)					
4 500	2	1,8	1,5	0,9	0,6	
9 000	3,6	3,5	3,0	2,1	1,2	
13 500		3,6	3,2	2,7	1,8	1,2
18 000		5,2	4,3	3,6	2,4	1,8
22 500			4,9	4,0	2,7	1,8
27 000				4,6	3,3	2,4
31 500					4,6	3,0

Note: When BP/MP is less than 50%, the reservoir diameters above can be reduced by 1/2". When draining condensate from a single piece of equipment in a **closed system**, to achieve maximum energy efficiency (see Closed System figure on page CRE-228) a reservoir should be installed horizontally above and ahead of the pump trap. Sufficient reservoir volume is required above the filling head level to hold condensate during the pump trap discharge cycle. The table above shows the minimum reservoir sizing, based on the condensate load, to prevent equipment flooding during the pump trap discharge cycle.

Table CRE-241-2. EPT-516 Vented Receiver for an Open System

Flash Steam kg/h	Receiver Diameter (in)	Receiver Length (mm)	Vent Line Diameter (in)
up to			
450	16"	1500	6"
900	20"	1500	8"
1 360	24"	1500	8"
1 820	26"	1500	10"
2 270	28"	1500	10"
2 720	30"	1800	12"
3 180	32"	1800	12"
3 630	36"	1800	14"

Note: When draining from single or multiple pieces of equipment in an **open system**, a vented receiver should be installed horizontally above and ahead of the pump trap (see Open System figure on page CRE-228). In addition to sufficient holding volume of the condensate above the fill head of the pump trap to hold the condensate during the pump trap cycle, the receiver must also be sized to allow enough area for flash steam and condensate separation. An overflow could also be added when required. The minimum recommended water seal is 300 mm. The table above shows proper receiver tank sizing based on flash steam present. See chart left to calculate the percentage (%) of flash steam at a given pressure drop.

PT-300LL/PT-400LL Light Liquid Pump Traps

Features

- Non-electric uses nitrogen or inert gas to operate
- Standard unit intrinsically safe
- Carbon steel
- Low maintenance–No leaking seals, impeller or motor problems
- All stainless steel internals with durable Inconel X-750 springs
- Externally removable/replaceable seats–seats can be replaced or cleaned without removing pump cap from body
- For specific gravity down to 0,65
- CE marked according to directive 2014/68/UE

Typical Applications

- Hydrocarbon knockout drum/separator
- Flare header drain
- Applications where the specific gravity of the liquid could be as low as 0,65
- Applications where hydrocarbons may be present

Technical Data

Back Pressure

- Maximum back pressure for the PT-300LL or PT-400LL is 4 bar

Motive Pressure

- Maximum motive pressure (Nitrogen or Inert Gas) is 7 bar

Capacities

- PT-300LL will discharge approximately 45 liters per cycle
- PT-400LL will discharge approximately 29 liters per cycle

Note: To determine the kg/hr of liquid being pumped, use the following formula:

kg/hr of liquid = capacities x specific gravity of liquid

To size the Light Liquid Pumps, use the sizing charts on pages CRE-215 and CRE-217.

Consult Armstrong for engineered pre-piped receiver packages.

PT-300LL Light Liquid Pump Trap

PT-400LL Light Liquid Pump Trap

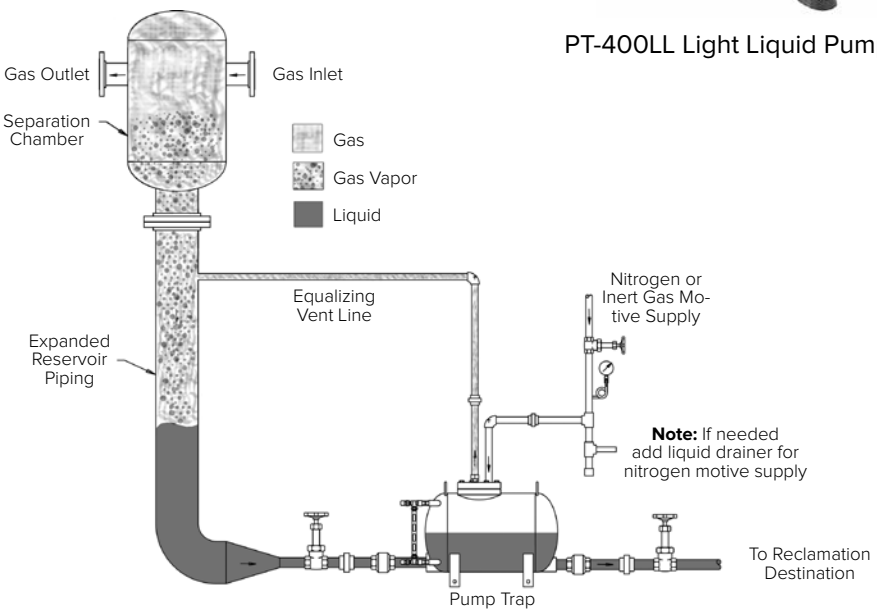

Hydrocarbon Knockout Drum Separator

Armstrong International SA • Parc Industriel des Hauts-Sarts (2e Avenue) • 4040 Herstal • Belgium
Tel.: +32 (0)4 240 90 90 • Fax: +32 (0)4 240 40 33
www.**armstrong**international.eu • info@**armstrong**international.eu

Notes

Double Duty® 4
Steam Trap/Pump Combination

Condensate Recovery Equipment

Description
Armstrong's Double Duty® Series steam trap/pump combination offers a low profile solution to draining heat exchangers in various applications.
t
The Double Duty® 4 is a low profile pump that offers you the versatility of combining a pump within a steam trap to aide in condensate drainage from a heat exchanger under all operating conditions.

Features
- Economical. non-electric operation
- Low-maintenance operation. No leaking seals, impeller or motor problems. No NPSH issues.
- Space-saving size. Low-profile body fits in tight spaces while allowing minimal fill head.
- Lower installation costs. Single trade installation.
- Peace of mind. Intrinsically safe.
- Ductile iron durability. Rugged construction material means long service life.
- Efficiency. A closed loop means no motive or flash steam is lost. All valuable heat is captured and returned to the system.
- Safety. The trap/pump can be used in pits or sumps without fear of electrocution or circuit breaker defaults.

Maximum Operating Conditions
Maximum allowable pressure:
EDD-4 5 bar @ 160°C

Maximum operating pressure:
EDD-4 5 bar @ 160°C

Materials
Body: Ductile iron
Mechanism: All stainless steel
Springs: 304 Stainless steel
Float: All stainless steel

Table CRE-244-1. Double Duty® 4 Physical Data

	mm
«A»	284
«B»	274
«C»	1"
«D»	203
«E»	61
«F»	25
«G»	76
«H»	155
«J»	41
«K»	140
«L»	251
Weight kg	17

Double Duty® 4

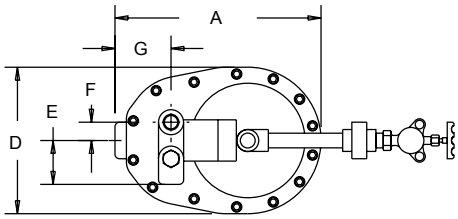

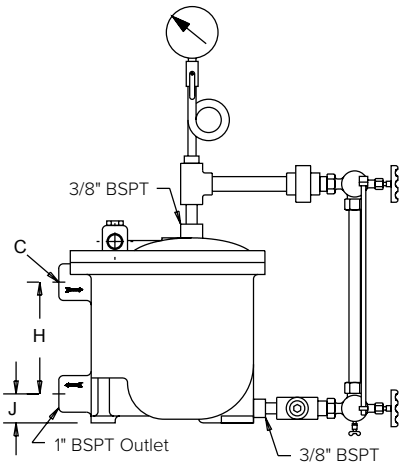

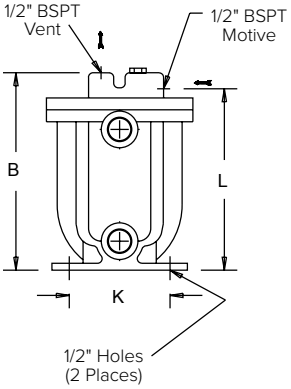

All dimensions and weights are approximate. Use certified print for exact dimensions. Design and materials are subject to change without notice.

Table CRE-245-1. Double Duty® 4 Pump Capacities		
Motive	**Back Pressure**	**Capacity**
bar	bar	kg/hr
1 1,7 3,5 4,5	0,34	100 136 158 159
1,7 3,5 4,5	1	100 156 158
2,5 3,5 4,5	1,7	100 147 158
3,5 4 4,5	3	100 136 152
4,5	4	100

Note: Published capacities are based on the use of external check valves supplied by Armstrong. Fill head measured from drain point to top of pump case.

Table CRE-245-2. Double Duty® 4 Trap Capacities	
Differential Pressure	**Capacity**
bar	kg-hr
0,34	610
0,7	900
1,4	1 300
2,1	1 550
3	1 745
3,4	1 850
4,1	1 925
4,8	2 000

Table CRE-245-3. Capacity Conversion Factors for Other Filing Heads			
	Filling Head		
mm	**0**	**150**	**305**
Double Duty EDD-4	0,65	1,0	1,10

Note: Fill head measured from drain to top of cap.

Double Duty® 6
Steam Trap/Pump Combination

Condensate Recovery Equipment

Description
Armstrong's Double Duty® Series steam trap/pump combination offers a low profile solution to draining heat exchangers in various applications.

The Double Duty® 6 is a CE marked carbon steel vessel according to PED 2014/68/UE. The Double Duty® 6 offers you the versatility of combining a pump within a steam trap to aide in condensate drainage under all operating conditions.

Features
- Economical. non-electric operation
- Low-maintenance operation. No leaking seals, impeller or motor problems. No NPSH issues.
- Space-saving size. Low-profile body fits in tight spaces while allowing minimal fill head.
- Lower installation costs. Single trade installation.
- Peace of mind. Intrinsically safe.
- Carbon Steel durability. Rugged construction material means long service life.
- Efficiency. A closed loop means no motive or flash steam is lost. All valuable heat is captured and returned to the system.
- Safety. The trap/pump can be used in pits or sumps without fear of electrocution or circuit breaker defaults.

Double Duty® 6

Maximum Operating Conditions
Maximum allowable pressure:
EDD-6 14 bar @ 204°C

Maximum operating pressure:
EDD-6 14 bar @ 204°C

Materials
Body: Carbon Steel
Springs: Inconel X-750
Internals: All stainless steel

Table CRE-246-1. EDD-6 Pumping Trap Physical Data

Model Number	EDD-6	
	DIN	ANSI
«A»	887	920
«B»	DN40	1-1/2"
«C»	DN25	1"
«D»	1" BSPT	1" NPT
«E»	1/2" BSPT	1/2" NPT
Weight kg	66	

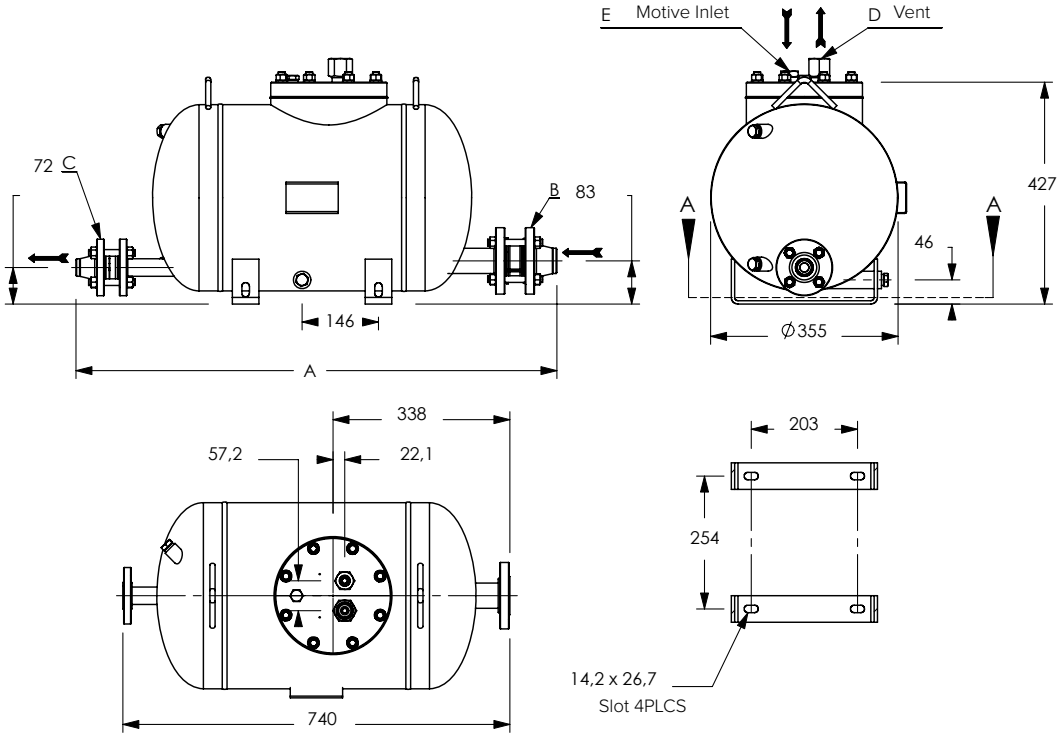

All dimensions and weights are approximate. Use certified print for exact dimensions. Design and materials are subject to change without notice.

Table CRE-247-1. Double Duty® 6 Pump Capacities

Motive	Back Pressure	Capacity
bar	bar	kg/hr
1	0,34	1 089
1,7		1 361
3,5		1 814
5		2 041
7		2 087
8,5		2 132
10,34		2 177
12		2 177
14		2 087
1,7	1	907
3,5		1 270
5		1 542
7		1 633
8,5		1 678
10,34		1 724
12		1 633
14		1 588
2,5	1,7	816
3,5		1 043
5		1 315
7		1 361
8,5		1 361
10,34		1 315
12		1 134
14		1 043
3,5	3	635
5		907
7		1 089
8,5		1 134
10,34		1 134
12		816
14		771
5	4	680
7		816
8,5		907
10,34		771
12		680
14		635

Note: Published capacities are based on the use of external check valves supplied by Armstrong. Fill head measured from drain point to top of pump case.

Table CRE-247-2. Double Duty® 6 Trap Capacities

Differential Pressure	Capacity
bar	kg-hr
0,14	4 309
0,34	5 625
0,7	6 804
1,7	9 253
3,5	10 206
5,2	10 206
6,9	10 206
10,3	10 206
13,8	10 206

Table CRE-247-3. Capacity Conversion Factors for Other Filing Heads

	Filling Head			
mm	**0**	**150**	**300**	*** 600 or greater**
Double Duty EDD-6	0,7	1,0	1,08	*** 620 or greater Consult factory**

* Discharge per cycle typically 13,6 litres for EDD-6
Note: Fill head measured from drain to top of cap.

Armstrong Open system Pump Trap Packages

From institutional low pressure steam heating to industrial process critical heat transfer, Amrstrong's engineered condensate pump trap package provide the most efficient and cost-effective solution to customer's condensate recovery requirements.

Armstrong Engineered Condensate Pump trap Package provides the following benefits :

- Reduce piping layout, detailed engineering and procurement
- Minimize field labor
- Prevent installation errors and safety mishaps
- Shorten overall project lead times
- Single Source Responsibility
- Lower total cost of ownership for the customer

To optimize the return on your condensate investment, consider Armstrong Engineered Pump Trap Package Solutions.

Table CRE-248-1. Open System Pump Trap Package - List of Materials	
Pump's Body and Cap	Fabricated Steel
Pump's Inlet Valve Assembly	Stainless Steel
Pump's Outlet Valve Assembly	Stainless Steel
Pump's Mechanism Assembly	Cast Stainless Steel
Pump's Springs	Iconel X-750
Wafer Check Valve	Stainless Steel
Vented Receiver	Carbon Steel
Steam Motive Line Drain Trap	Cast Iron
Isolation Ball Valve	Carbon Steel
Piping and Flanges	Carbon Steel

Maximum Allowable Pressure: 10 bar @ 250°C
Maximum Operating Pressure: 9 bar

All models are CE marked according to the PED (2014/68/UE)

Options on Pump

- Gauge glass Assembly with guards (Brass or Cadium Plated Carbon Steel)
- Digital Cycle Counter (with or without auxilliary contact)
- Insulation Jacket

Options on Package

- Pressure reducing valve to reduce the motive pressure
- Stainless steel Trap Valve Station on steam motive line
- Steam trap in carbon steel
- Manometers

This package might be suitable for special applications.
Please consult factory.

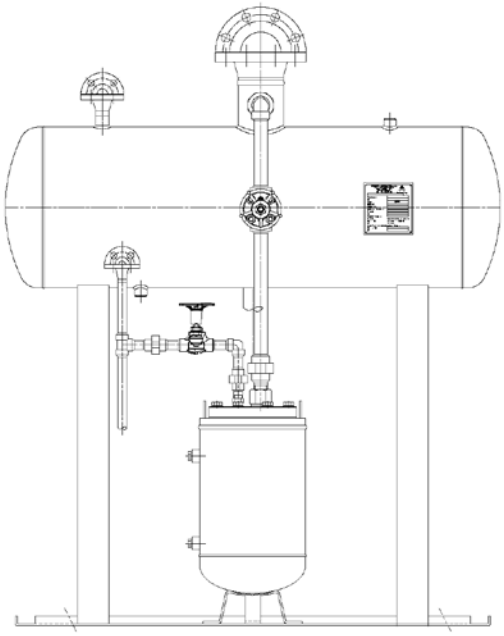

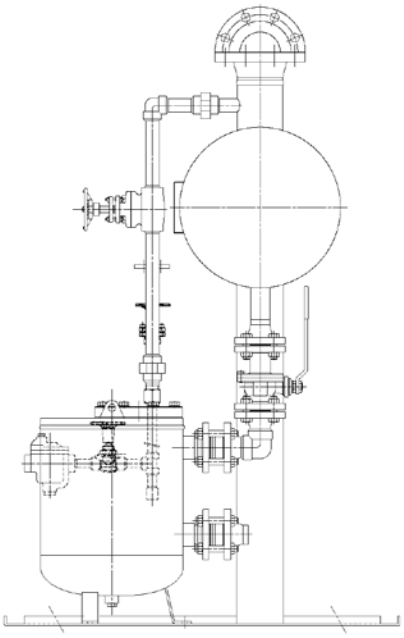

Armstrong International SA • Parc Industriel des Hauts-Sarts (2e Avenue) • 4040 Herstal • Belgium
Tel.: +32 (0)4 240 90 90 • Fax: +32 (0)4 240 40 33
www.**armstrong**international.eu • info@**armstrong**international.eu

Table CRE-249-1. Pumping Trap Receiver Packages Capacities

Motive Pressure	Back Pressure	SEPT-206		DEPT-206		SEPT-412		DEPT-412		TEPT-412		SEPT-308		DEPT-308	
		Steam	Air	Steam	Air	Steam	Air	Steam	Air	Steam	Air	Steam	Air	Steam	Air
bar	bar	kg/h	kg/h	kg/h	kg/h	kg/h	kg/h	kg/h	kg/h	kg/h	kg/h	kg/h	kg/h	kg/h	kg/h
1,0	0,35	1 470	1 635	2 940	3 270	3 740	4 045	7 480	8 090	11 220	12 135	3 130	4 175	6 260	8 350
1,7		1 740	1 905	3 480	3 810	5 490	5 815	10 980	11 630	16 470	17 445	4 620	4 945	9 240	9 890
3,5		1 850	1 960	3 700	3 920	5 840	6 060	11 680	12 120	17 520	18 180	4 810	5 035	9 620	10 070
5,0		1 905	2 015	3 810	4 030	5 990	6 160	11 980	12 320	17 970	18 480	4 900	5 125	9 800	10 250
6,0		1 930	—	3 860	—	6 015	—	12 030	—	18 045	—	4 990	—	9 980	—
1,7	1	1 305	1 470	2 610	2 940	3 590	4 130	7 180	8 260	10 770	12 390	3 175	4 580	6 350	9 160
3,5		1 740	1 850	3 480	3 700	5 190	5 615	10 380	11 230	15 570	16 845	4 355	4 945	8 710	9 890
5,0		1 795	1 905	3 590	3 810	5 390	5 715	10 780	11 430	16 170	17 145	4 875	5 035	9 750	10 070
6,0		1 810	—	3 620	—	5 440	—	10 880	—	16 320	—	4 910	—	9 820	—
2,5	1,5	1 150	1 250	2 300	2 500	3 445	4 070	6 890	8 140	10 335	12 210	3 220	4 175	6 440	8 350
3,5		1 310	1 415	2 620	2 830	4 840	5 410	9 680	10 820	14 520	16 230	3 765	4 630	7 530	9 260
5,0		1 470	1 580	2 940	3 160	4 990	5 440	9 980	10 880	14 970	16 320	4 580	4 990	9 160	9 980
6,0		1 535	—	3 070	—	5 040	—	10 080	—	15 120	—	4 605	—	9 210	—
3,5	3	850	1 090	1 700	2 180	2 895	3 555	5 790	7 110	8 685	10 665	2 585	3 450	5 170	6 900
4,0		1 090	1 250	2 180	2 500	3 445	4 070	6 890	8 140	10 335	12 210	2 995	3 990	5 990	7 980
5,0		1 250	1 360	2 500	2 720	3 790	4 240	7 580	8 480	11 370	12 720	3 450	4 580	6 900	9 160
6,0		1 310	—	2 620	—	2 845	—	5 690	—	8 535	—	3 630	—	7 260	—
4,5	4,0	750	1 090	1 500	2 180	2 500	3 315	5 000	6 630	7 500	9 945	2 040	3 175	4 080	6 350
5,0		900	1 250	1 800	2 500	2 695	3 445	5 390	6 890	8 085	10 335	2 130	3 220	4 260	6 440
6,0		1 050	—	2 100	—	2 995	—	5 990	—	8 985	—	2 515	—	5 030	—

Note: Although motive pressure are shown at high pressure differentials (difference between motive inlet pressure and total lift or back pressure), it is preferable to use a motive pressure of 0,65 – 1,0 bar above discharge (outlet) pressure. This ensure longevity of check valves and reduces both venting time and temperature differential (on steam)

Table CRE-249-2. Pumping Trap Receiver Packages Capacities

Motive Pressure	Back Pressure	TEPT-308		QEPT-308		SEPT-312		DEPT-312		TEPT-312		QEPT-312	
		Steam	Air	Steam	Air	Steam	Air	Steam	Air	Steam	Air	Steam	Air
bar	bar	kg/h	kg/h	kg/h	kg/h	kg/h	kg/h	kg/h	kg/h	kg/h	kg/h	kg/h	kg/h
1,0	0,35	9 390	12 525	12 520	16 700	4 080	5 580	8 160	11 160	12 240	16 740	16 320	22 320
1,7		13 860	14 835	18 480	19 780	5 990	6 440	11 980	12 880	17 970	19 320	23 960	25 760
3,5		14 430	15 105	19 240	20 140	6 850	7 170	13 700	14 340	20 550	21 510	27 400	28 680
5,0		14 700	15 375	19 600	20 500	6 940	7 305	13 880	14 610	20 820	21 915	27 760	29 220
6,0		14 970	—	19 960	—	6 985	—	13 970	—	20 955	—	27 940	—
1,7	1	9 525	13 740	12 700	18 320	4 080	5 080	8 160	10 160	12 240	15 240	16 320	20 320
3,5		13 065	14 835	17 420	19 780	5 805	6 260	11 610	12 520	17 415	18 780	23 220	25 040
5,0		14 625	15 105	19 500	20 140	6 440	6 805	12 880	13 610	19 320	20 415	25 760	27 220
6,0		14 730	—	19 640	—	6 460	—	12 920	—	19 380	—	25 840	—
2,5	1,5	9 660	12 525	12 880	16 700	3 675	5 215	7 350	10 430	11 025	15 645	14 700	20 860
3,5		11 295	13 890	15 060	18 520	4 630	5 785	9 260	11 570	13 890	17 355	18 520	23 140
5,0		13 740	14 970	18 320	19 960	5 670	6 125	11 340	12 250	17 010	18 375	22 680	24 500
6,0		13 815	—	18 420	—	6 460	—	12 920	—	19 380	—	25 840	—
3,5	3	7 755	10 350	10 340	13 800	2 995	4 445	5 990	8 890	8 985	13 335	11 980	17 780
4,0		8 985	11 970	11 980	15 960	3 810	4 760	7 620	9 520	11 430	14 280	15 240	19 040
5,0		10 350	13 740	13 800	18 320	4 445	5 760	8 890	11 520	13 335	17 280	17 780	23 040
6,0		10 890	—	14 520	—	4 510	—	9 020	—	13 530	—	18 040	—
4,5	4,0	6 120	9 525	8 160	12 700	2 270	4 630	5 440	9 260	8 160	13 890	10 880	18 520
5,0		6 390	9 660	8 520	12 880	2 905	4 720	5 810	9 440	8 715	14 160	11 620	18 880
6,0		7 545	—	10 060	—	3 060	—	6 120	—	9 180	—	12 240	—

Note: Although motive pressure are shown at high pressure differentials (difference between motive inlet pressure and total lift or back pressure), it is preferable to use a motive pressure of 0,65 – 1,0 bar above discharge (outlet) pressure. This ensure longevity of check valves and reduces both venting time and temperature differential (on steam)

Vertical Open System Pumping Trap Packages

Capacity to 7530 kg/hr (16600lb/hr) with standard filling head 300mm

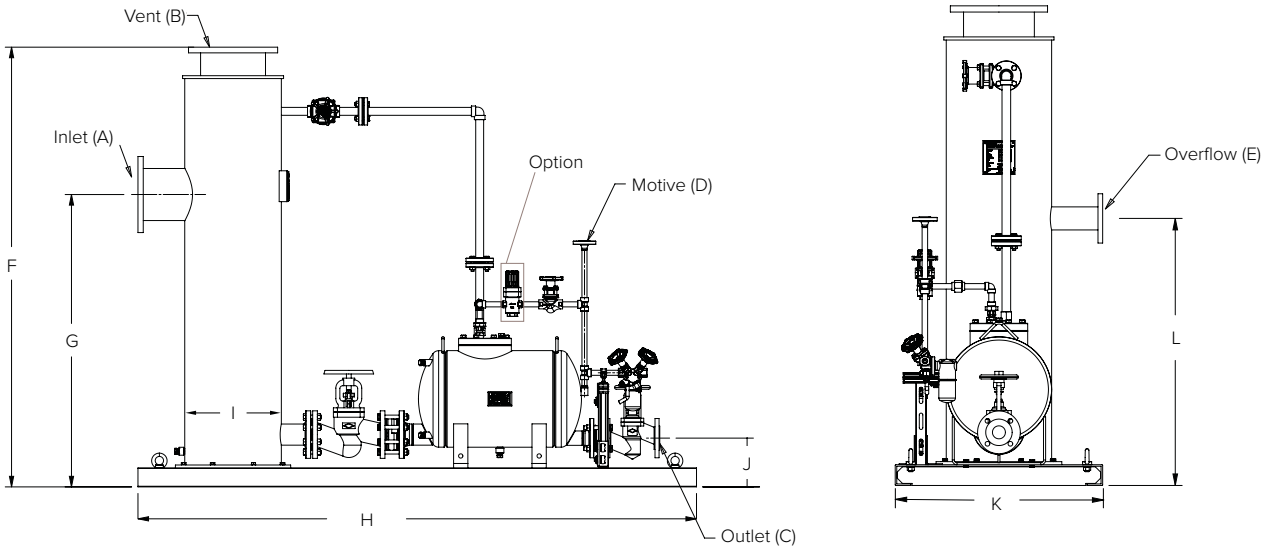

Description

This package system is designed and destined for Food/Pharma/ General industry. For other markets having more or different requirements, please consult factory.

- Pumping trap package includes a vertical vented receiver (Open System).
- Reduces piping layout, detailed engineering & procurement
- Small footprint
- Easy access & maintenance
- Configuration only available for Open System to atmosphere

Maximum Operating Conditions

For package:
Maximum allowable pressure: 10barg @200 °C
Maximum operating pressure: 8.5barg
For receiver
Maximum allowable pressure: 0.5 barg

Connections

Flange acc. to EN 1092-1
ANSI flange on request

Standard

CE Marked according to the PED (2014/68/UE)
Machinery Directive 2006/42/UE

Materials

Pump and receiver : Carbon Steel
Mechanism assembly: Stainless Steel
Springs : Inconel X-750
Motive and vent valves : Stainless Steel
Plug: Carbon Steel

Options

Pressure reducing valve on motive line
Additional filling head (600 or 900 mm)
Syphon for the overflow
Inlet manifold for multiple inlets
Jacket insulation for the complete package

How to Order

Specify:

- Model number
- Type of flange connection
- Condensate load
- Motive pressure
- Motive fluid
- Back pressure
- Any options required

For a fully detailed certified drawing, refer to drawing number S33776.

Table CRE-250-1. SEPT Pump Package - Dimensions (mm)

Model No.	SEPT-206 OS V	SEPT-408 OS V	SEPT-312 OS V
A	DN100 PN6RF	DN150 PN6RF	DN200 PN6RF
B	DN100 PN6RF	DN150 PN6RF	DN200 PN6RF
C	DN40 PN40RF	DN50 PN40RF	DN50 PN40RF
D	DN15 PN40RF	DN15 PN40RF	DN15 PN40RF
E	DN80 PN6RF	DN80 PN6RF	DN80 PN6RF
F*	1940	1960	1850
G*	1330	1360	1230
H	1600	1800	2350
I	DN200	DN300	DN400
J	300	320	211
K	700	700	800
L	1130	1160	1030

* F and G dimensions with standard filling head 300 mm

Armstrong International SA • Parc Industriel des Hauts-Sarts (2e Avenue) • 4040 Herstal • Belgium
Tel.: +32 (0)4 240 90 90 • Fax: +32 (0)4 240 40 33
www.**armstrong**international.eu • info@**armstrong**international.eu

Vertical Open System Pumping Trap Packages

Capacity to 7530 kg/hr (16600lb/hr) with standard filling head 300mm

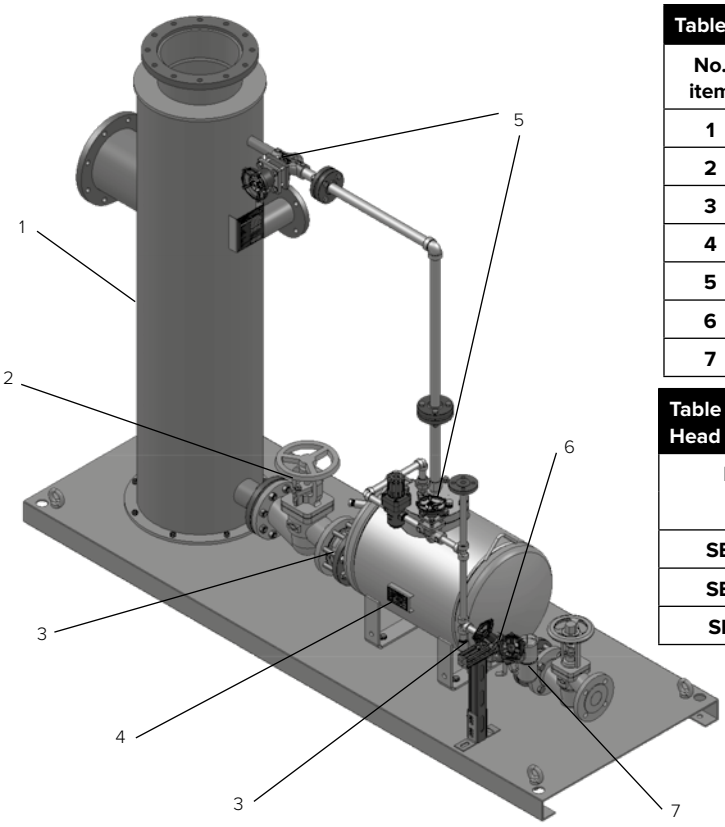

Table CRE-251-1. Pump Package Components

No. item	Description	Material
1	Vertical atmospheric receiver	Carbon Steel
2	Bellows valve	Nodular Cast Iron
3	Wafer check valves	Stainless Steel
4	Mechanical pumping trap	Carbon Steel
5	Piston valves	Carbon Steel
6	TVS-4000 connector	Stainless Steel
7	2011 inverted bucket steam trap	Stainless Steel

Table CRE-251-2. Capacity Conversion Factor for Other Filling Head

Model	Filling Head (mm)		
	300	**600**	**900**
SEPT-206	1	1.2	1.3
SEPT-408	1	1.2	1.35
SEPT-312	1	1.08	1.2

For other filling head (higher than 300 mm), please apply the conversion factor on the standard capacity from the above table.

Table CRE-251-3. Pumping Trap Package Capacities (with filling heat at 300 mm)

Motive Pressure	Back Pressure	SEPT-206 OS V	SEPT-408 OS V	SEPT-312 OS V
bar	**bar**	**kg/h**	**kg/h**	**kg/h**
1.0	0.35	1470	2245	4080
1.7		1740	3295	5990
3.5		1850	3540	6850
5.0		1905	3590	6940
7.0		1960	3640	7030
8.5		2015	3695	7530
1.7	1.0	1305	2695	4080
3.5		1740	3145	5805
5.0		1795	3245	6440
7.0		1825	3345	6485
8.5		1850	3395	6850
2.5	1.5	1150	2095	3675
3.5		1310	2895	4630
5.0		1470	2990	5670
7.0		1600	3050	5760
8.5		1650	3195	5900
3.5	3.0	850	2170	2995
4.0		1090	2545	3810
5.0		1250	2845	4445
7.0		1375	2990	4580
8.5		1430	3095	4670
4.5	4.0	750	1900	2720
5.0		900	2045	2905
7.0		1200	2245	3220
8.5		1280	2395	3360

Note : other inlet motive gas might be used increasing the efficiency of the pump - For more information, please consult factory.

Armstrong Closed system Pump Trap Packages

From institutional low pressure steam heating to industrial process critical heat transfer, Amrstrong's engineered condensate pump trap package provide the most efficient and cost-effective solution to customer's condensate recovery requirements.

Armstrong Engineered Condensate Pump trap Package provides the following benefits :

- Reduce piping layout, detailed engineering and procurement
- Minimize field labor
- Prevent installation errors and safety mishaps
- Shorten overall project lead times
- Single Source Responsibility
- Lower total cost of ownership for the customer

To optimize the return on your condensate investment, consider Armstrong Engineered Pump Trap Package Solutions.

Table CRE-252-1. Closed System Pump Trap Package - List of Materials	
Pump's Body and Cap	Fabricated Steel
Pump's Inlet Valve Assembly	Stainless Steel
Pump's Outlet Valve Assembly	Stainless Steel
Pump's Mechanism Assembly	Cast Stainless Steel
Pump's Springs	Iconel X-750
Wafer Check Valve	Stainless Steel
Closed Receiver	Carbon Steel
Steam Trap at Pump Outlet	Cast Iron
Steam Motive Line Drain Trap	Cast Iron
Isolation Ball Valve	Carbon Steel
Piping and Flanges	Carbon Steel

Maximum Allowable Pressure: 10 bar @ 250°C
Maximum Operating Pressure: 9 bar

All models are CE marked according to the PED (2014/68/UE)

Options on Pump

- Gauge glass Assembly with guards (Brass or Cadium Plated Carbon Steel)
- Digital Cycle Counter (with or without auxilliary contact)
- Insulation Jacket

Options on Package

- Pressure reducing valve to reduce the motive pressure
- Stainless steel Trap Valve Station on steam motive line
- Steam trap in carbon steel
- Manometers

This package might be suitable for special applications.
Please consult factory.

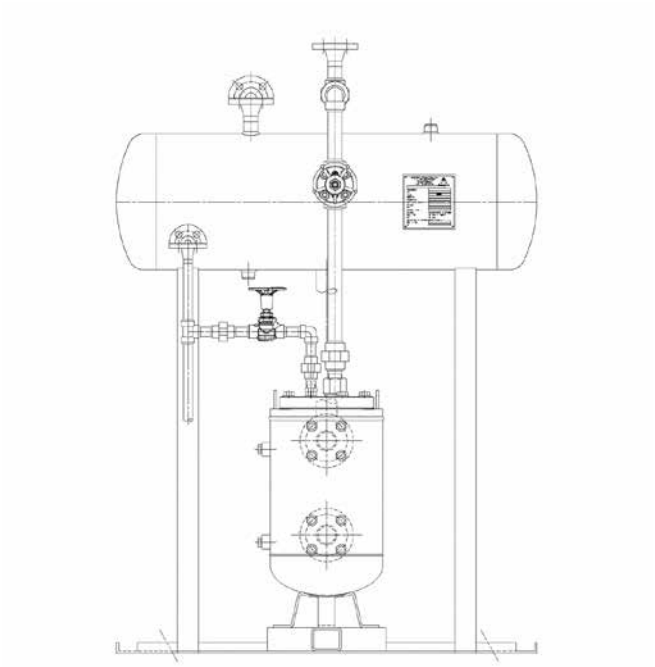

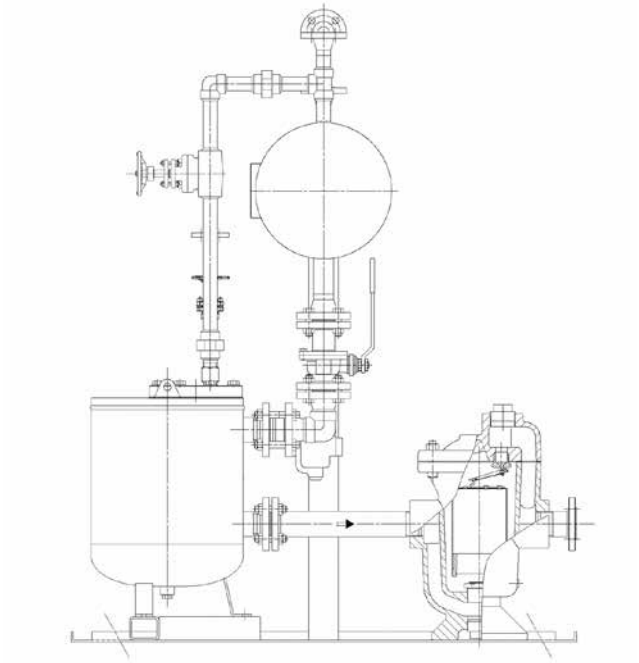

Armstrong International SA • Parc Industriel des Hauts-Sarts (2e Avenue) • 4040 Herstal • Belgium
Tel.: +32 (0)4 240 90 90 • Fax: +32 (0)4 240 40 33
www.**armstrong**international.eu • info@**armstrong**international.eu

Armstrong Closed system Pump Trap Packages

Table CRE-253-1. Closed System Pumping Trap Receiver Packages Capacities (steam only as motive)

Motive Pressure	Back Pressure	SEPT-206	DEPT-206	SEPT-412	DEPT-412	TEPT-412	SEPT-308	DEPT-308
bar	bar	kg/h	kg/h	kg/h	kg/h	kg/h	kg/h	kg/h
1,0	0,35	1 470	2 940	3 740	7 480	11 220	3 130	6 260
1,7		1 740	3 480	5 490	10 980	16 470	4 620	9 240
3,5		1 850	3 700	5 840	11 680	17 520	4 810	9 620
5,0		1 905	3 810	5 990	11 980	17 970	4 900	9 800
6,0		1 930	3 860	6 015	12 030	18 045	4 990	9 980
1,7	1	1 305	2 610	3 590	7 180	10 770	3 175	6 350
3,5		1 740	3 480	5 190	10 380	15 570	4 355	8 710
5,0		1 795	3 590	5 390	10 780	16 170	4 875	9 750
6,0		1 810	3 620	5 440	10 880	16 320	4 910	9 820
2,5	1,5	1 150	2 300	3 445	6 890	10 335	3 220	6 440
3,5		1 310	2 620	4 840	9 680	14 520	3 765	7 530
5,0		1 470	2 940	4 990	9 980	14 970	4 580	9 160
6,0		1 535	3 070	5 040	10 080	15 120	4 605	9 210
3,5	3	850	1 700	2 895	5 790	8 685	2 585	5 170
4,0		1 090	2 180	3 445	6 890	10 335	2 995	5 990
5,0		1 250	2 500	3 790	7 580	11 370	3 450	6 900
6,0		1 310	2 620	2 845	5 690	8 535	3 630	7 260
4,5	4,0	750	1 500	2 500	5 000	7 500	2 040	4 080
5,0		900	1 800	2 695	5 390	8 085	2 130	4 260
6,0		1 050	2 100	2 995	5 990	8 985	2 515	5 030

Note: Although motive pressure are shown at high pressure differentials (difference between motive inlet pressure and total lift or back pressure), it is preferable to use a motive pressure of 0,65 – 1,0 bar above discharge (outlet) pressure. This ensure longevity of check valves and reduces both venting time and temperature differential (on steam)

Table CRE-253-2. Closed System Pumping Trap Receiver Packages Capacities (steam only as motive)

Motive Pressure	Back Pressure	TEPT-308	QEPT-308	SEPT-312	DEPT-312	TEPT-312	QEPT-312
bar	bar	kg/h	kg/h	kg/h	kg/h	kg/h	kg/h
1,0	0,35	9 390	12 520	4 080	8 160	12 240	16 320
1,7		13 860	18 480	5 990	11 980	17 970	23 960
3,5		14 430	19 240	6 850	13 700	20 550	27 400
5,0		14 700	19 600	6 940	13 880	20 820	27 760
6,0		14 970	19 960	6 985	13 970	20 955	27 940
1,7	1	9 525	12 700	4 080	8 160	12 240	16 320
3,5		13 065	17 420	5 805	11 610	17 415	23 220
5,0		14 625	19 500	6 440	12 880	19 320	25 760
6,0		14 730	19 640	6 460	12 920	19 380	25 840
2,5	1,5	9 660	12 880	3 675	7 350	11 025	14 700
3,5		11 295	15 060	4 630	9 260	13 890	18 520
5,0		13 740	18 320	5 670	11 340	17 010	22 680
6,0		13 815	18 420	6 460	12 920	19 380	25 840
3,5	3	7 755	10 340	2 995	5 990	8 985	11 980
4,0		8 985	11 980	3 810	7 620	11 430	15 240
5,0		10 350	13 800	4 445	8 890	13 335	17 780
6,0		10 890	14 520	4 510	9 020	13 530	18 040
4,5	4,0	6 120	8 160	2 270	5 440	8 160	10 880
5,0		6 390	8 520	2 905	5 810	8 715	11 620
6,0		7 545	10 060	3 060	6 120	9 180	12 240

Note: Although motive pressure are shown at high pressure differentials (difference between motive inlet pressure and total lift or back pressure), it is preferable to use a motive pressure of 0,65 – 1,0 bar above discharge (outlet) pressure. This ensure longevity of check valves and reduces both venting time and temperature differential (on steam)

EAFT Series Flash Tanks

Carbon Steel

For condensate capacities up to 9 070 kg/h... Flash steam up to 1 360 kg/h

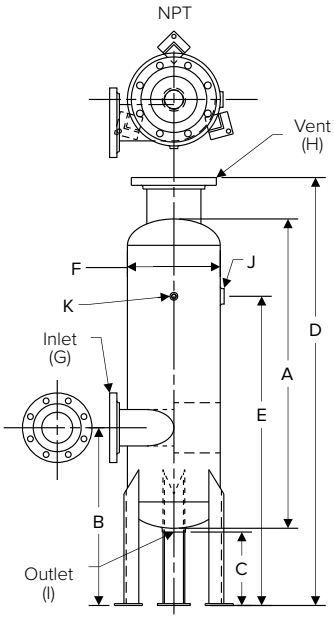

Features

- CE marked vessels
- Standard pressure rating 10 bar (other pressure ratings available upon request)
- Standard models are designed and sized to cover a wide range of applications and loads
- Flash vessels are designed to provide low velocity flash steam with no water carryover
- Quick payback for flash recovery investment
- Special tanks available upon request

Flash Steam Savings Analysis

Part I: Determining the amount of flash steam produced

A. Condensate Load A =_____kg/h
B. Annual hours of operation B =_____h/year
C. Steam Cost C =_____€/ton
D. Flash steam percentage from chart (on page CRE-255) D =_____%
E. Flash steam produced: D x A = flash steam produced E =_____kg/h

Part II: Determining value of the flash steam

F. Annual flash steam savings:

$$F = \frac{E \times B \times C}{1\,000}$$

F =_____€/year

Table CRE-254-1. EAFT Dimensions (in mm)

Model No.	EAFT-6	EAFT-8	EAFT-12	EAFT-16
A	914	914	1 016	1 058
B	559	584	584	660
C	254	254	221	254
D	1 270	1 301	1 407	1 452
E	965	932	1 016	1 058
F	273	273	406	406
G	2" 150#	3" 150#	4" 150#	6" 150#
H	2 1/2" 150#	4" 150#	6" 150#	6" 150#
I	1 1/2"	1 1/2"	2"	2"
J	3/4"	1"	1 1/2"	2"
K	1/2"	1/2"	1/2"	1/2"

Note: Standard connections «G» and «H» are flanged ANSI 150#, all others are NPT. Available also with DIN flanged PN40 «G» and «H» connections, all others being BSPT. Special sizes available upon request.

Table CRE-254-2. EAFT Capacities

Model No.	Maximum Condensate Load	Maximum Flash Load
	kg/h	kg/h
EAFT-6	900	230
EAFT-8	2 270	450
EAFT-12	4 540	900
EAFT-16	9 070	1 360

Maximum Allowable Pressure (Vessel Design): 10 bar.
Maximum Allowable Temperature: 260°C.
Maximum Operating Pressure: 10 bar.
All models are CE Marked according to the PED (2014/68/UE).

All dimensions and weights are approximate. Use certified print for exact dimensions. Design and materials are subject to change without notice.

Armstrong International SA • Parc Industriel des Hauts-Sarts (2e Avenue) • 4040 Herstal • Belgium
Tel.: +32 (0)4 240 90 90 • Fax: +32 (0)4 240 40 33
www.**armstrong**international.eu • info@**armstrong**international.eu

EAFT Series Flash Tanks

Carbon Steel

For condensate capacities up to 9 070 kg/h... Flash steam up to 1 360 kg/h

How much flash steam is available?

1. Follow horizontal axis right to primary discharge pressure.
2. Follow vertically up to secondary pressure curve.
3. Move left to "Percentage of flash steam".

Example:

Condensate load	=	4 500 kg/h
Primary pressure	=	4,5 bar
Secondary pressure	=	0,6 bar
Percentage of flash	=	10,6%
Secondary steam load	=	464 kg/h

(4 500 kg/h x 0,106 = 464 kg/h)

Selection:

Model EAFT-12

Percentage of Flash Steam formed when discharging Condensate to Reduced Pressure

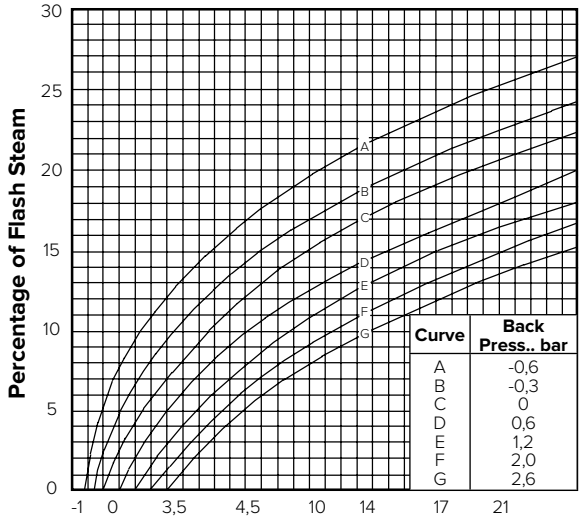

Application Information

A. Condensate Load to Flash Tank: **2 700** kg/h
B. Pressure of Incoming Condensate: **6,5** bar
C. Flash Tank Pressure: **1,2** barg
D. Flash Percentage: **9,5**%
E. Flash Amount = A x (D/100) = **257** kg/h
F. Low Pressure Steam Required: **1 150** kg/h
G. High Pressure Steam (used as Motive): **5** bar
H. Back Pressure: **2** bar

Flash tank will accommodate (A) **2 700 kg/h** of condensate at (B) **6,5 bar**, resulting in (E) **257 kg/h** of flash steam at (C) **1,2 barg**. The flash tank shall be Armstrong Model EAFT-12.

The pressure reducing valve shall pass (F) **1 150 kg/h** of steam from (G) **14 barg** to (C) **1,2 barg**. Pressure reducing valve shall be GP-2000 in DN20.

Considering that back pressure (4) is **2 bar**, it will always be higher than the Flash Tank Pressure (C), which is **1,2 bar**. That is why, a Pumping Trap is necessary. The Pumping Trap shall be an Armstrong EPT-408 as it should discharge (A - E) **2 143 kg/h** with a motive pressure of **5 bar**.

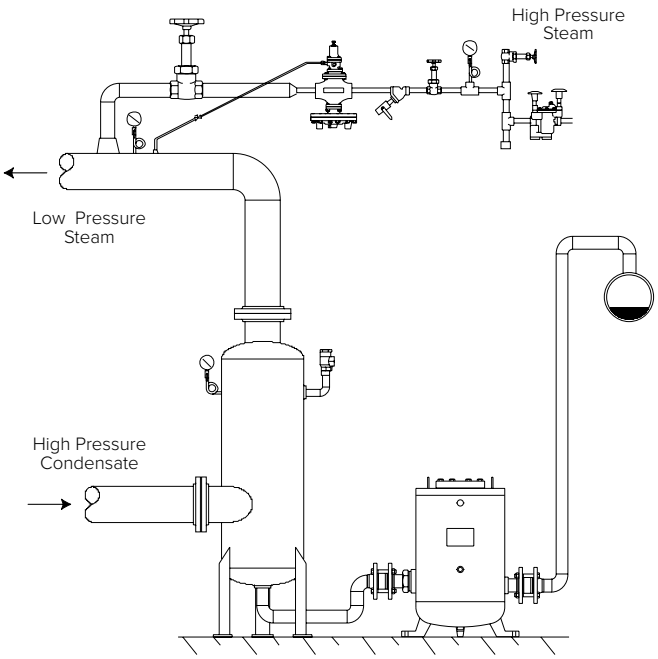

All dimensions and weights are approximate. Use certified print for exact dimensions. Design and materials are subject to change without notice.

GD-22 Posi-Pressure Draining System

For Heat Exchangers up to 500 kg/h of Steam

Condensate Recovery Equipment

Forget About Flooded Heat Exchangers

The major cause of flooded heat exchangers is a lack of sufficient pressure differential across the steam trap under modulated steam conditions. With Armstrong's Posi-Pressure Control System, there is always a minimum preset differential pressure between the heat exchanger and the condensate return system. Even if the pressure in the condensate return changes, the Posi-Pressure Controller automatically adjusts to maintain the preset differential.

Forget About Water Hammer

When heat exchangers flood, steam and cold condensate frequently come in contact with each other. When this happens, the steam rapidly condenses, causing water hammer. This water hammer condition can cause damage to heat exchangers, piping and fittings. By eliminating heat exchanger flooding, the Posi-Pressure Control System will solve the problem.

Forget About Frozen Steam Coils

Most steam coils freeze because they are flooded with condensate. Costly – bulky – and high maintenance face and by-pass coil systems were created to solve this problem by maintaining a positive differential steam pressure. Now, with Armstrong's Posi-Pressure Control System, simple and inexpensive modulated control systems can do the same job. However, we must caution that proper steam coil design, steam trapping and venting practices are also required for freeze protection. If assistance is needed, Armstrong's Representatives are trained to analyze your total steam system and offer you solutions to your problems.

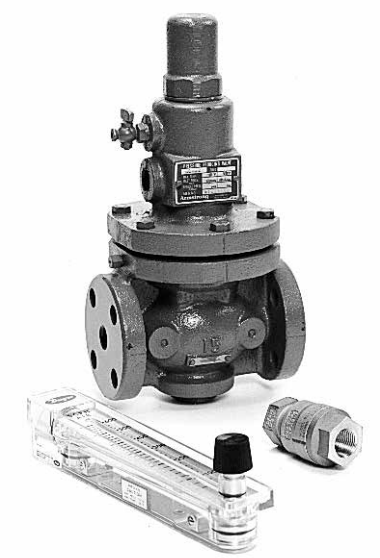

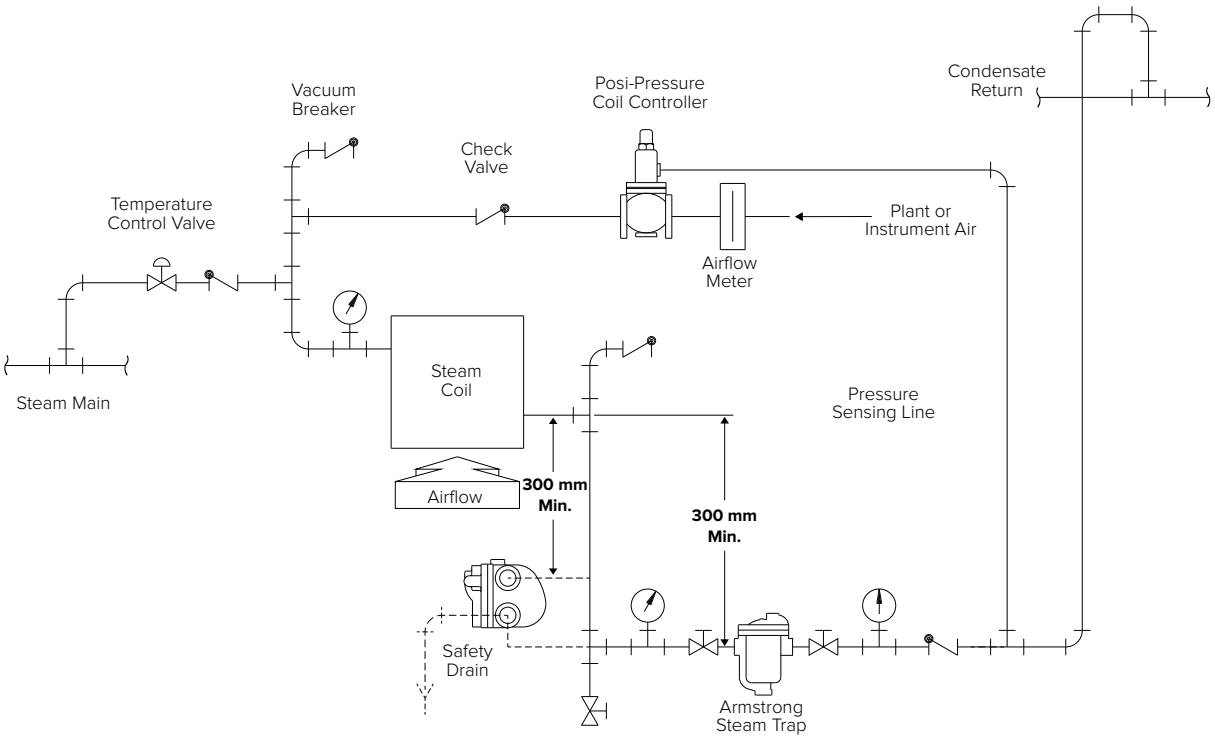

Armstrong International SA • Parc Industriel des Hauts-Sarts (2e Avenue) • 4040 Herstal • Belgium
Tel.: +32 (0)4 240 90 90 • Fax: +32 (0)4 240 40 33
www.**armstrong**international.eu • info@**armstrong**international.eu

GD-22 Posi-Pressure Draining System

For Heat Exchangers up to 500 kg/h of Steam

How Does the Posi-Pressure Control System Work?

A normal steam system may modulate into a vacuum to control temperature. A vacuum breaker is often installed to prevent this condition. Once the vacuum breaker opens, temperature control is accomplished by mixing the air with the steam. The steam/air mixture results in a lower temperature. However, even a vacuum breaker will not work if condensate has to be elevated to an overhead return, or if the return system is pressurized.

The Posi-Pressure Control System acts as a vacuum breaker. Instead of introducing air at atmospheric pressure, the controller injects air at an elevated pressure into the heat exchanger. The user presets the level of elevated air pressure at the time of installation. Rather than a specific pressure, the controller maintains a specific differential pressure across the steam trap. Even if a steam trap fails or other causes change the condensate return pressure, the controller will sense this difference and maintain the preset differential.

How Much Air Will Be Used?

The Posi-Pressure Control System uses very little air. The amount depends upon the size of the steam trap selected. Air usage can vary from as little as 0,3 to 2,5 m^3/h or more on large systems. Once the initial air is introduced, only the leakage through the large vent bucket in the steam trap must be added. This air volume is so low that it is practically undetectable in a deaerator.

Are There Any Other Advantages?

Yes! It is generally recommended that float and thermostatic traps be used on modulated steam systems because they drain better when there is no motive pressure other than the static head of condensate. With a positive pressure always being maintained by the Posi-Pressure Control System, an inverted bucket steam trap with its inherent longer life expectancy can, and must, be used. Since air is injected at a positive pressure, carbon dioxide (the real cause of corrosion) is diluted and swept clear of the heat exchanger.

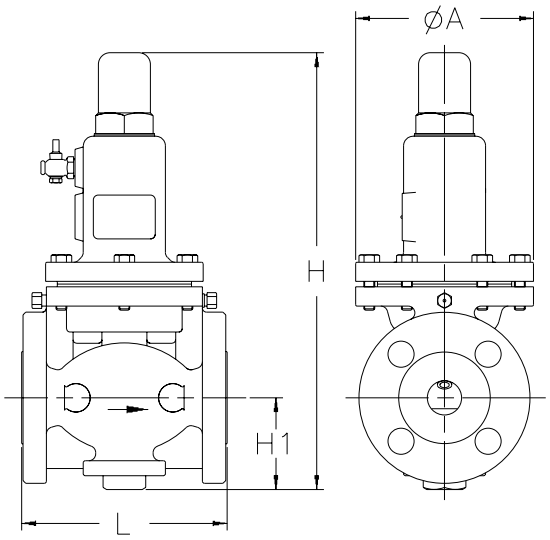

Table CRE-257-1. Dimensions (in mm)

Size	L	A	H	H1	Cv	Weight
1/2"	146	133	298	57	2,5	8,4 kg

Note: «L» Dimension does not include companion flanges. Add 25 mm for companion flanges.
This model comply with the article 4.3 of the PED (2014/68/UE).

Table CRE-257-2. Materials

Body	Cast Iron ASTM A48
Main Valve	NBP
Valve Seat	304 Stainless Steel
Diaphragm	NBR
Connection	ANSI 125 lb. Flange with 1/2" NPT companion flange

Table CRE-257-3. Specifications

Application	Inlet Pressure	Reduced Pressure	Maximum Temperature	Minimum Differential
Air	10 bar	0,5 - 2,5 bar	79°C	0,5 bar

All dimensions and weights are approximate. Use certified print for exact dimensions. Design and materials are subject to change without notice.

Armstrong International SA • Parc Industriel des Hauts-Sarts (2e Avenue) • 4040 Herstal • Belgium
Tel.: +32 (0)4 240 90 90 • Fax: +32 (0)4 240 40 33
www.**armstrong**international.eu • info@**armstrong**international.eu

MTS – Thermosiphon Mixer

For pressures to 20 bar... Capacities to 500 kg/h

Condensate Recovery Equipment

Description

The MTS allows you to mix very hot condensate with condensate at a lower temperature, while avoiding the water hammers that would usually occur. An internal coil slowly raises the temperature of the condensate coming out of the steam trap, until it reaches the mixing temperature. The thermosiphon effect created at the outlet of the coil sends the mix of condensate at homogeneous temperature back to the condensate return line.

Maximum Condensate Flow

Maximum Allowable Pressure :	20 bar
Maximum Allowable Temperature :	250°C
Maximum Operating Pressure :	20 bar

Connections

Socketweld

Advantages

- Eliminates water hammers
- Full stainless steel coil to avoid any corrosion
- Self-regulating (operates only when the steam-trap is discharging hot condensate)
- The system already reacts from a differential temperature of 3°C.
- Serial or Parallel installations are possible

Specifications

The MTS is designed to work in an optimal way combined with an Armstrong F&T steam trap. Consult factory for any other steam trap type utilization.

Options

- Universal Connector
- Steam Trap

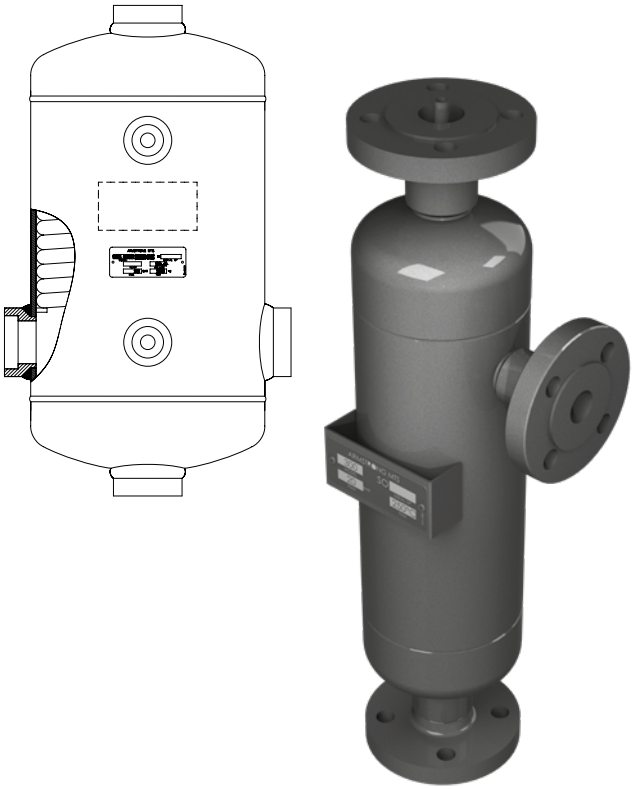

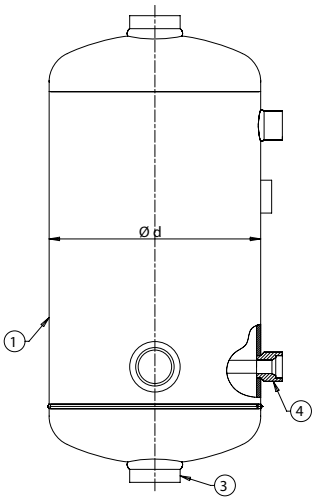

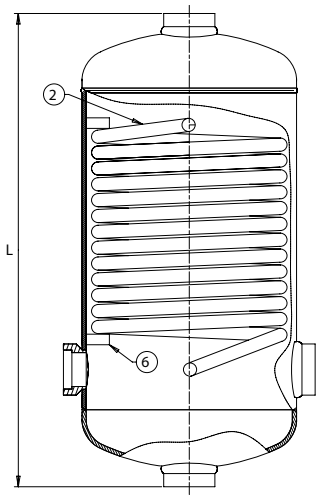

MTS-500

Table CRE-258-1. MTS 300 Series – Thermosiphon Mixer (dimensions in mm)	
L Face to Face	444
d External Diameter of the body	115
1 Cold Condensate Inlet	1"
2 Hot Condensate Inlet	3/4"
3 Outlet Mixed-Condensate	1"

Table CRE-258-2. MTS 500 Series– Thermosiphon Mixer (dimensions in mm)	
L Face to Face	572
d External Diameter of the body	234
3 Cold Condensate Inlet	2"
4 Cold Condensate Outlet	1 1/4"
6 or 6' Cold Condensate Inlet	2"
7 Drain	2"
8 Hot Condensate Inlet	1 1/4"
9 Cold Condensate Outlet	2"

All dimensions and weights are approximate. Use certified print for exact dimensions. Design and materials are subject to change without notice.

MTS – Thermosiphon Mixer

For pressures to 20 bar... Capacities to 500 kg/h

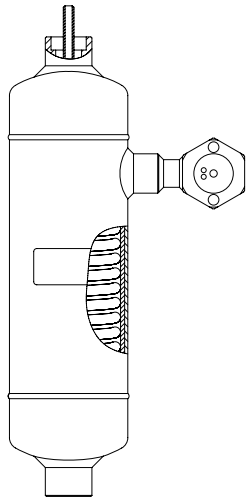

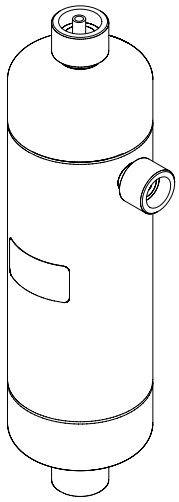

Table CRE-259-1. Materials

Rep	MTS-300	MTS-500	Description	MTS-300	MTS-500
	Elements			Materials	
1	1	1	Body	304L STN. STL.	P265GH A106B
2	1	1	Coil	316L STN STL.	316L STN STL.
3	2	4	Couplet	304L STN. STL.	C22.8
4	1	2	Couplet	304L STN. STL.	304L STN. STL.
5	1	1	Identification Tag	Aluminium	Aluminium
6 ou 6’	N/A	2	Couplet	N/A	C22.8
7	N/A	1	Drain	304L STN. STL.	N/A
8	N/A	1	Hot Condensate Inlet	304L STN. STL.	N/A
9	N/A	1	Cold Condensate Outlet	304L STN. STL.	N/A

Note: MTS-300 has common condensate outlets and can be delivered with universal connector and steam trap as options.

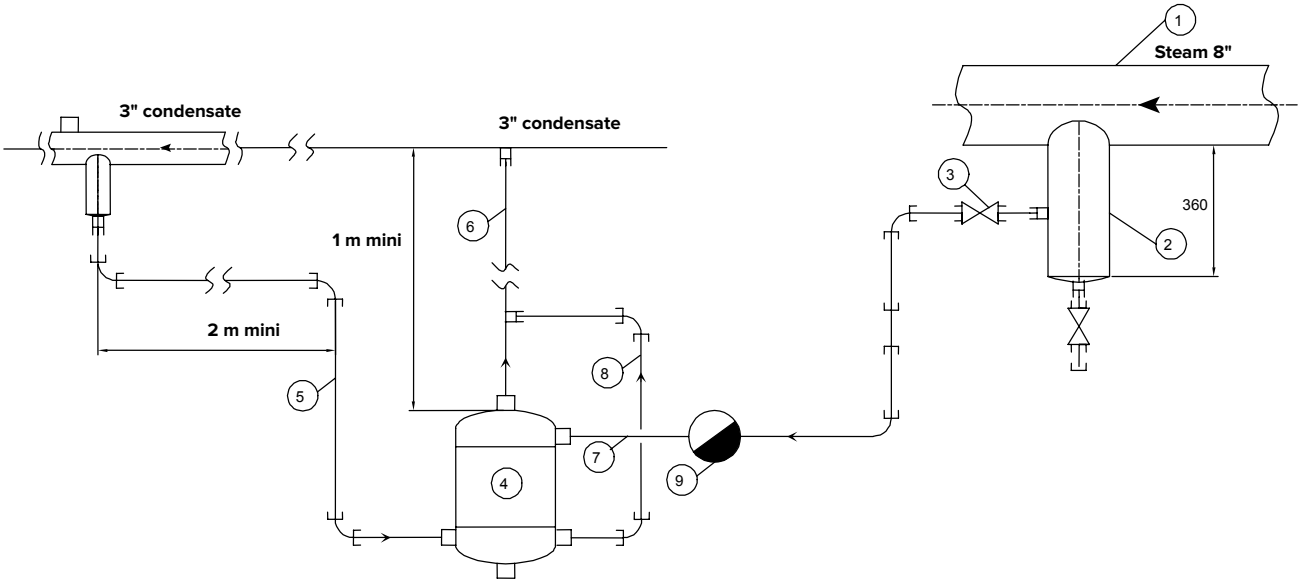

Typical Installation

1. Stream line
2. Drip leg
3. Drip leg isolation valve
4. Thermosiphon mixer
5. Low temperature condensate inlet
6. Low temperature condensate outlet
7. Hot condensate inlet
8. Cooled condensate outlet
9. Armstrong steam trap F&T 2000 mounted on universal connector

For bigger size installation, please contact Armstrong or your local Representative.