ISO 15552 CYLINDER Ø 160-200 (ex ISO 6431) WITH ROUND BARREL

Cylinders made to ISO 15552 available in various versions and with a wide range of accessories:

- configuration with or without magnet
- double-acting – single-or through-rod
- NBR gaskets or FKM/FPM (high temperature)
- available with mounted intermediate hinge
- special configurations on request

TECHNICAL DATA		NBR	FKM/FPM
Max operating pressure	bar	10	
	MPa	1	
Temperature range	°C	-20 to +80	-10 to +150
Design		Round barrel with tie rods	
Standard strokes	mm	25-50-75-80-100-125-150-200-250-300-350-400-500-600-700-800-900-1000	
Weight		See cylinder "**General technical data**" at the beginning of the chapter	
Forces generated at 6 bar (tensile stress)		See cylinder "**General technical data**" at the beginning of the chapter	

COMPONENTS

① PISTON ROD: C45 steel or stainless steel, thick chromed
② HEAD: die cast aluminium
③ PISTON ROD GASKET: NBR or FKM/FPM
④ GUIDE BUSHING: sintered bronze
⑤ BARREL: drawn anodized aluminium alloy
⑥ PISTON: aluminium
⑦ PISTON GASKET: NBR or FKM/FPM
⑧ MAGNET: plastoferrite
⑨ CUSHIONING CAP: aluminium
⑩ CUSHIONING GASKET: polyurethane or FKM/FPM
⑪ CUSHIONING NEEDLE: OT 58 with needle out movement safety system even when fully open
⑫ SCREWS: galvanised steel
⑬ TIE RODS: stainless steel
⑭ GUIDE BELT: technopolimer
⑮ STATIC O-RINGS: NBR or FKM/FPM

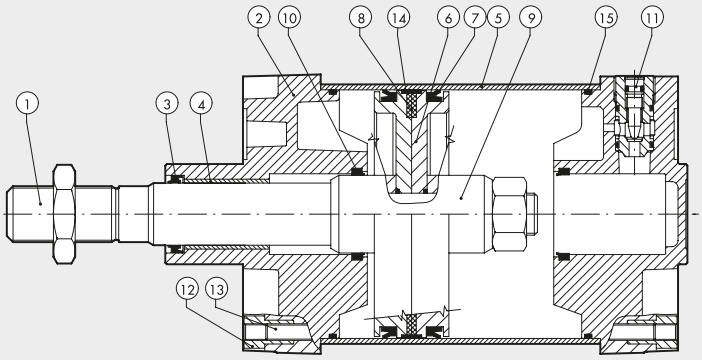

DIMENSIONS OF STANDARD VERSION

+ = ADD THE STROKE

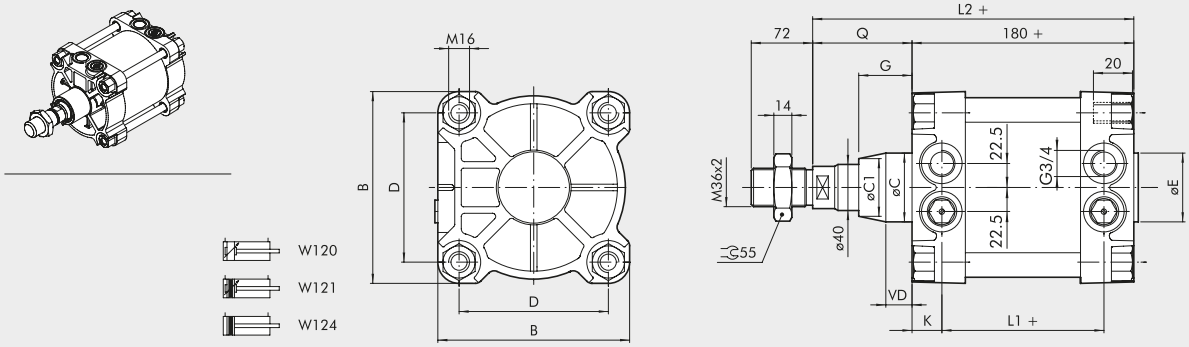

Ø	B	øC	øC1	øE	D	G	L_1	L_2	Q	VD	K
160	180	65	-	65	140	50	124	260	80	-	28
200	220	75	~ 65	75	175	60	122	275	95	~ 15	29

DIMENSIONS OF THROUGH-ROD VERSION

+ = ADD THE STROKE
++ = ADD TWICE THE STROKE

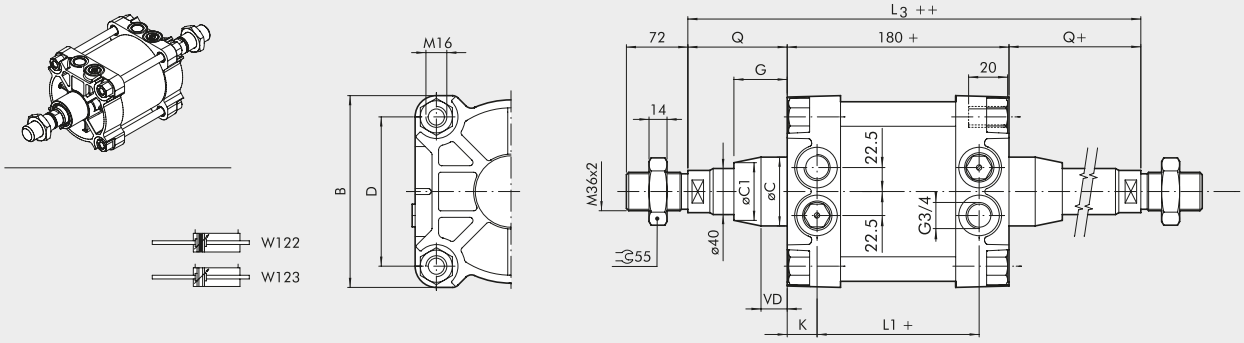

Ø	B	øC	øC1	D	G	L_1	L_3	Q	VD	K
160	180	65	-	140	50	124	340	80	-	28
200	220	75	~ 65	175	60	122	370	95	~ 15	29

DIMENSIONS OF VERSION WITH INTERMEDIATE HINGE

+ = ADD THE STROKE

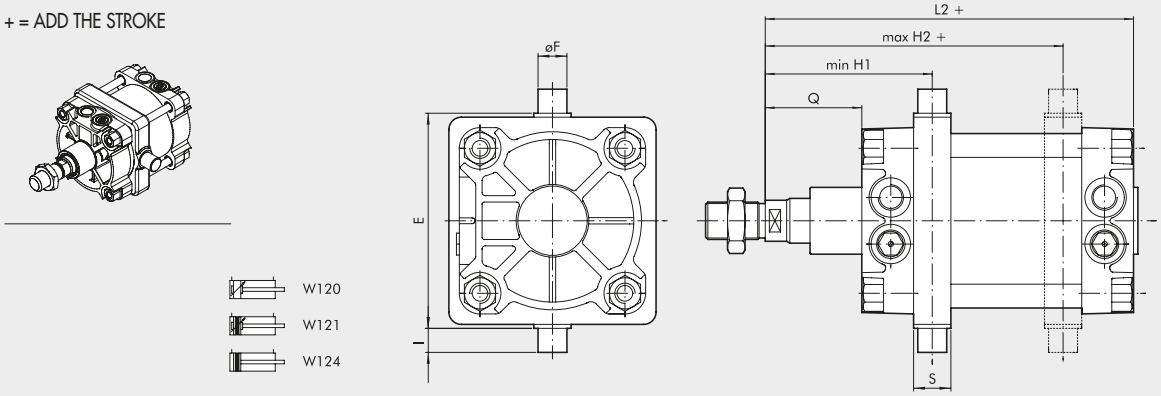

Ø	E	øF	H1	H2	I	L2	Q	S
160	200	32	150	190	32	260	80	40
200	250	32	165	205	32	275	95	40

For the missing values, refer to standard cylinders. **In your order, please specify the desired value for H1**

KEY TO CODES FOR ROUND BARREL

CYL	W 1 2 1	1 6 0	0 0 5 0	0 2 0 0
	TYPE	DIAMETER-EXECUTION	STROKE	EXECUTION
	W120 Double-acting, cushioned, non magnetic **W121** Double-acting, cushioned, **W122** Double-acting, cushioned, through-rod **W123** Double-acting, cushioned, through-rod, non magnetic **W124** Double-acting, non-cushioned	**160** 160 **200** 200 **XA3** 160 stainless steel piston rod **XA4** 200 stainless steel piston rod **VA3** 160 FKM/FPM gasket, stainless steel piston rod **VA4** 200 FKM/FPM gasket, stainless steel piston rod **KA3** 160 FKM/FPM gasket, C45 piston rod **KA4** 200 FKM/FPM gasket, C45 piston rod **AA3** 160 + intermediate hinge **AA4** 200 + intermediate hinge ● **GA3** 160 No stick-slip ● **GA4** 200 No stick-slip	✚ 0025 to 2800 mm	**Specify H1 value ONLY for version with intermediate hinge**

✚ Maximum recommended strokes. Higher values can create operating problems
● **For speeds lower than 0.2 m/s, to prevent surging. Use no-lubricated air only**

VERSION WITH SHAPED BARREL

An alternative to the round barrel version is a version with a shaped barrel.
The technical data, components and dimensions are the same as for the round barrel version.

Note: Type with intermediate hinge not available.

KEY TO CODES FOR SHAPED BARREL

CYL	1 2 1	1 6 0	0 0 5 0	A	N
	TYPE	DIAMETER-EXECUTION	STROKE	MATERIAL	GASKETS
	120 Double-acting, cushioned, non-magnetic **121** Double-acting, cushioned, **122** Double-acting, cushioned, through-rod **124** Double-acting, non-cushioned	**160** 160 **200** 200 **SA3** 160 non magnetic **SA4** 200 non magnetic ● **GA3** 160 No stick-slip ● **GA4** 200 No stick-slip	✚ 0025 to 2800 mm	**A** C45 chromed, piston rod **Z** Stainless steel chromed, piston rod	**N** NBR gaskets **V** FKM/FPM gaskets

✚ Maximum recommended strokes. Higher values can create operating problems
● **For speeds lower than 0.2 m/s, to prevent surging. Use no-lubricated air only**

ACCESSORIES FOR ISO 15552 CYLINDERS Ø 160-200: FIXINGS

METAL WORK PNEUMATIC

FOOT - MODEL A

+ = ADD THE STROKE

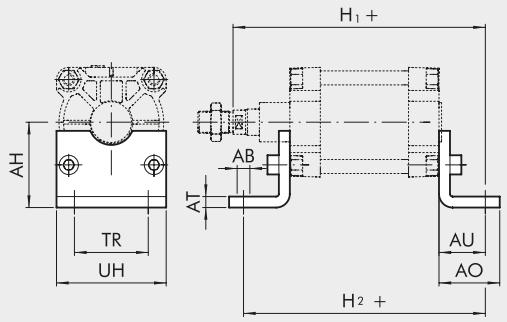

Code	Ø	AB	AH	AO	AT	AU	H_1	H_2	TR	UH	Weight [g]
W0951602001	160	18	115	80	10	60	319	300	115	180	2400
W0952002001	200	22	135	100	12	70	345	320	135	220	4000

Note: Individually packed with 2 screws

FEMALE HINGE - MODEL B

+ = ADD THE STROKE

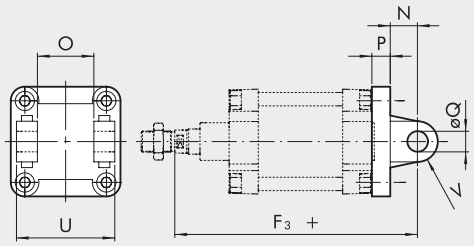

Code	Ø	U	O	øQ	P	N	F_3	V	Weight [g]
W0951602003	160	170	90	30	20	35	314	25	3300
W0952002003	200	170	90	30	25	35	335	25	4300

Note: Supplied complete with 4 screws, 2 snap rings and 1 pin

MALE HINGE - MODEL BA

+ = ADD THE STROKE

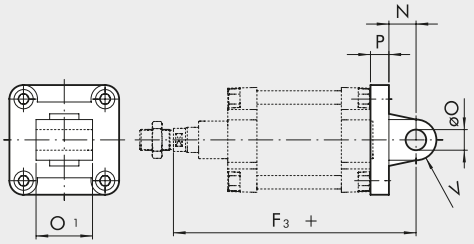

Code	Ø	O_1	øO	P	N	F_3	V	Weight [g]
W0951602004	160	90	30	20	35	314	25	2150
W0952002004	200	90	30	25	35	335	25	3550

Note: Supplied complete with 4 screws

FLANGE - MODEL C (FRONT AND REAR)

+ = ADD THE STROKE

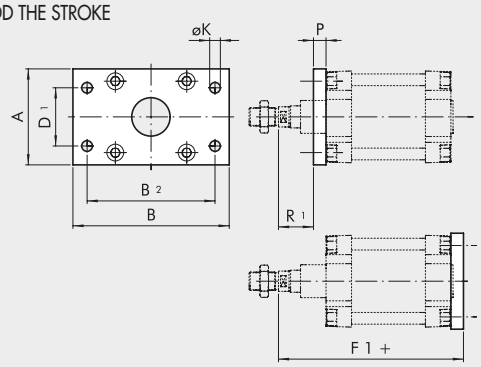

Code	Ø	A	B	B_2	D_1	øK	R_1	P	F_1	Weight [g]
W0951602002	160	180	270	230	115	18	59	20	279	6900
W0952002002	200	225	312	270	135	22	70	25	300	12800

Note: Individually packed with 4 screws

CETOP COUNTER-HINGE - MODEL GL

+= ADD THE STROKE

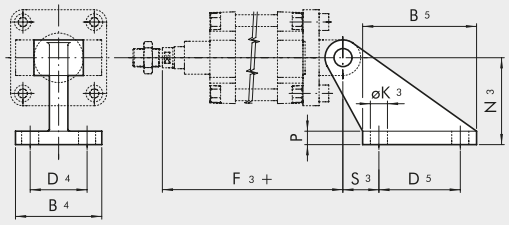

Code	Ø	B_4	B_5	D_4	D_5	N_2	N_3	S_3	$øK_3$	P	F_3	Weight [g]
W0951602008	**160**	110	154	63	110	55	140	50	18	20	314	2300
W0951602008	**200**	110	154	63	110	60	140	50	18	20	335	2300

Note: Supplied complete with 4 screws, 4 washers

COUNTER-HINGE MODEL EL

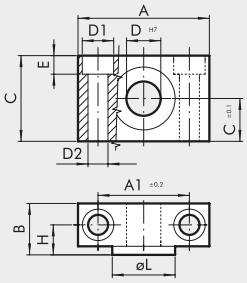

Code	Ø	A	A_1	B	C	C_1	D_1	D_2	D	E	H	øL	Weight [g]
W0951602009	**160**	92	60	40	60	30	25	17	32	16.5	22.5	48	2740
W0951602009	**200**	92	60	40	60	30	25	17	32	16.5	22.5	48	2740

Note: 2-pieces pack with 4 screws

ROD EYE - MODEL GA-M

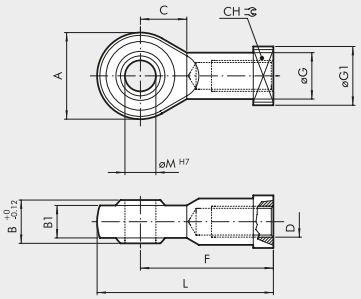

Code	Ø	øM	C	B_1	B	A	L	F	D	øG	CH	$øG_1$	Weight [g]
W0952002025	**160**	35	41	28	43	80	165	125	M36x2	46	50	58	1645
W0952002025	**200**	35	41	28	43	80	165	125	M36x2	46	50	58	1645

Note: Individually packed

FORK - MODEL GK-M

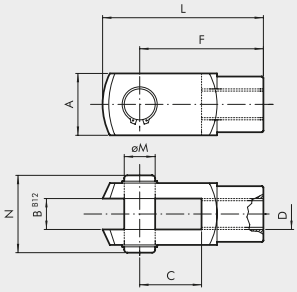

Code	Ø	øM	C	B	A	L	F	D	N	Weight [g]
W0951602020	**160**	35	72	35	70	188	144	M36x2	84	3850
W0951602020	**200**	35	72	35	70	188	144	M36x2	84	3850

Note: Individually packed

ROD NUT - MODEL S

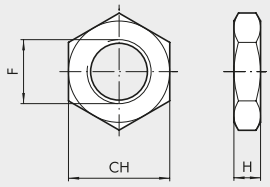

Code	Ø	F	H	CH	Weight [g]
W0951602010	**160**	M36x2	14	55	170
W0951602010	**200**	M36x2	14	55	170

Note: Individually packed

ACCESSORIES FOR ISO 15552 CYLINDERS Ø 160-200: MAGNETIC SENSORS

RETRACTABLE SENSOR

SENSOR, OVAL TYPE
Traditional

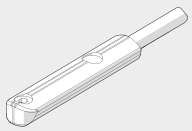

For codes and technical data, see **chapter A6**.

SENSOR SERIES DSM

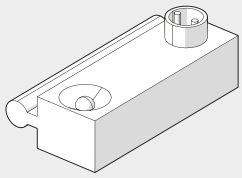

For codes and technical data, see **chapter A6**.

ADAPTOR FOR RETRACTABLE SENSOR

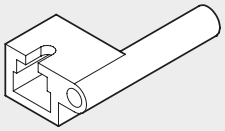

Code	Description
W0950001001	Adaptor DSS005 for DST/ST brackets

SENSOR SUPPORT BRACKET FOR STANDARD VERSION (WITH ROUND BARREL)

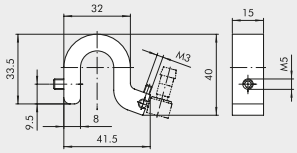

Code	Description
0951602093	Bracket 160-200

ASSEMBLY DIAGRAM

① ISO 15552 cylinder with traditional barrel
② Sensor bracket mod. ST (Ø 160 and 200)
③ Adaptor
④ Retractable sensor "oval type"

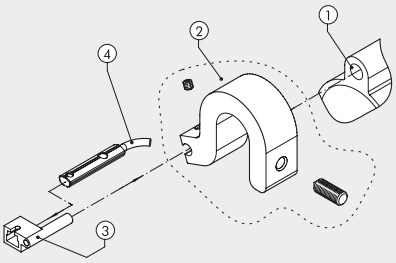

SENSOR SUPPORT BRACKET FOR OLD VERSION BARREL (SHAPED)

Ø 160

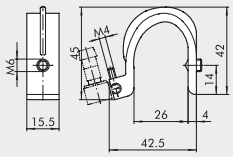

Code	Description
W0950000715	Bracket ST 160

Ø 200

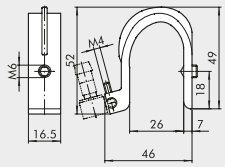

Code	Description
W0950000716	Bracket ST 200

CYLINDERS ISO 15552 Ø 160-200: SPARE PARTS

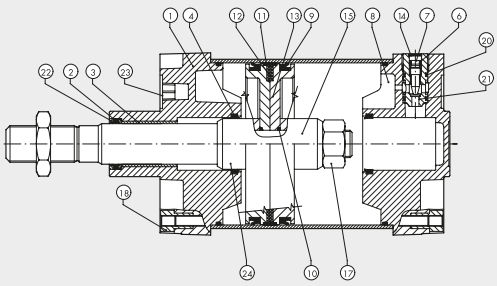

Code	Bores	Type	Parts
W095__2101	160 - 200	Complete set of gaskets	2-4-5-6-9-10-20-22
W0951602165	160 - 200	NBR piston rod gasket kit + seeger	2
W0951602166	160 - 200	FKM/FPM piston rod gasket kit + seeger	2
W095__2102	160 - 200	Complete set of (high temperature) FKM/FPM gaskets	2-4-5-6-9-10-20-22
W095__0104	160 - 200	Complete front head kit	1-2-3-4-5-6-7-14-18-20-21-22-23
W095__0105	160 - 200	Complete rear head kit	4-5-6-7-8-14-18-20-21-23
W095__2115	160 - 200	Complete magnetic piston kit	9-10-11-12-13-15-17-24
W095__2118	160 - 200	Complete non-magnetic piston kit	9-10-11-13-15-17-24
W095__2120	160 - 200	Complete head A + P + non-magnetic piston	1-2-3-4-5-6-7-8-9-10-11-13-14-15 17-18-20-21-22-23-24
W095__2119	160 - 200	Complete head A + P + magnetic piston	1-2-3-4-5-6-7-8-9-10-11-12-13-14 15-17-18-20-21-22-23-24
W095__2300	160 - 200	Magnet	12