ISO 15552 CYLINDER (EX ISO 6431)

Cylinders made to ISO 15552 available in various versions and with a wide range of accessories:

- Configuration with or without magnet
- Single-or double acting – single-or through-rod
- Wide choice of NBR, POLYURETHANE and FKM/FPM gaskets (for high temperatures, for low temperature)
- Special versions on request
- Fixing accessories, guide units and mechanical piston rod lock.

They are available in three series, which differ according to the shape of the barrel and, consequently, the type of sensors and accessories that can be mounted.
These cylinders are called series STD, type A, series 3.

TECHNICAL DATA		Polyurethane	NBR	FKM/FPM	Low Temperature
Max operating pressure	bar	10			
	MPa	1			
	psi	145			
Temperature range	°C	–25 to +80	–10 to +80	–10 to +150 (non-magnetic cyl.)	–35 to +80
Fluid		Unlubricated air. Lubrication, if used, must be continuous			
Bore	mm	32; 40; 50; 63; 80; 100; 125			
Design		Heads with Tap Tite screws			
Standard stroke ✚	mm	Single-acting: for bores 32 to 63 strokes from 1 to 250			
		Double-acting: for bores 32 to 80 strokes from 1 to 2800			
		for bores 100 to 125 strokes from 1 to 2600			
Versions		Double-acting cushioned, Single-acting extended or retracted rod cushioned, Through-rod cushioned, Long cushioning, High-temperature, Piston rod lock, Oil seal, Through-rod oil seal, Low friction, No stick-slip.			
Sensor magnet		All versions come complete with magnet. Supplied without magnet on request.			
Inrush pressure		Ø 32; 40: 0.4 bar			
		Ø 50; 63 strokes < 1500 mm: 0.3 bar; strokes > 1500 mm: 0.4 bar			
		Ø 80; 100; 125 strokes < 1500 mm: 0.2 bar; strokes > 1500 mm: 0.4 bar			
Notes		**For speeds lower than 0.2 m/s to prevent surging, use the version No stick-slip and non-lubricated air.**			
		✚ Maximum recommended strokes. Higher values can create operating problems			
Forces generated at 6 bar thrust/retraction		See cylinder "**General technical data**" at the beginning of the chapter			
Weights		See cylinder "**General technical data**" at the beginning of the chapter			

COMPONENTS

① PISTON ROD: C45 steel or stainless steel, thick chromed
② HEAD: die cast aluminium
③ PISTON ROD GASKET: polyurethane, NBR or FKM/FPM
④ GUIDE BUSHING: steel strip with bronze and PTFE insert
⑤ BARREL: drawn anodized calibrated aluminium
⑥ HALF-PISTON: self-lubricating technopolymer with built-in cushioning olives (aluminium with PTFE pad for diameters 80-100-125)
⑦ PISTON GASKET: polyurethane, NBR or FKM/FPM
⑧ MAGNET: plastoferrite
⑨ BUFFER + Static O-rings: NBR or FKM/FPM
⑩ CUSHIONING GASKET: polyurethane, NBR or FKM/FPM
⑪ CUSHIONING NEEDLE: OT 58 with needle out movement safety system even when fully open
⑫ SCREWS: Tap Tite for assembly

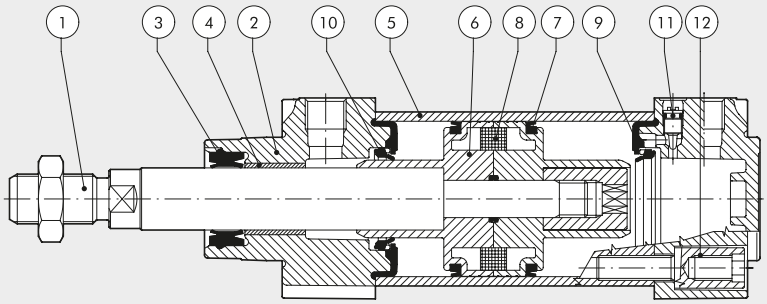

ISO 15552 CYLINDER – TYPE A (EX ISO 6431)

METAL WORK PNEUMATIC

ISO 15552 cylinders, featuring a barrel with longitudinal slots on three sides for inserting and securing retractable sensors.
The same slots can also be used for valves and other mechanical parts.

BARREL CROSS SECTION

① SLOTS FOR RETRACTABLE SENSOR

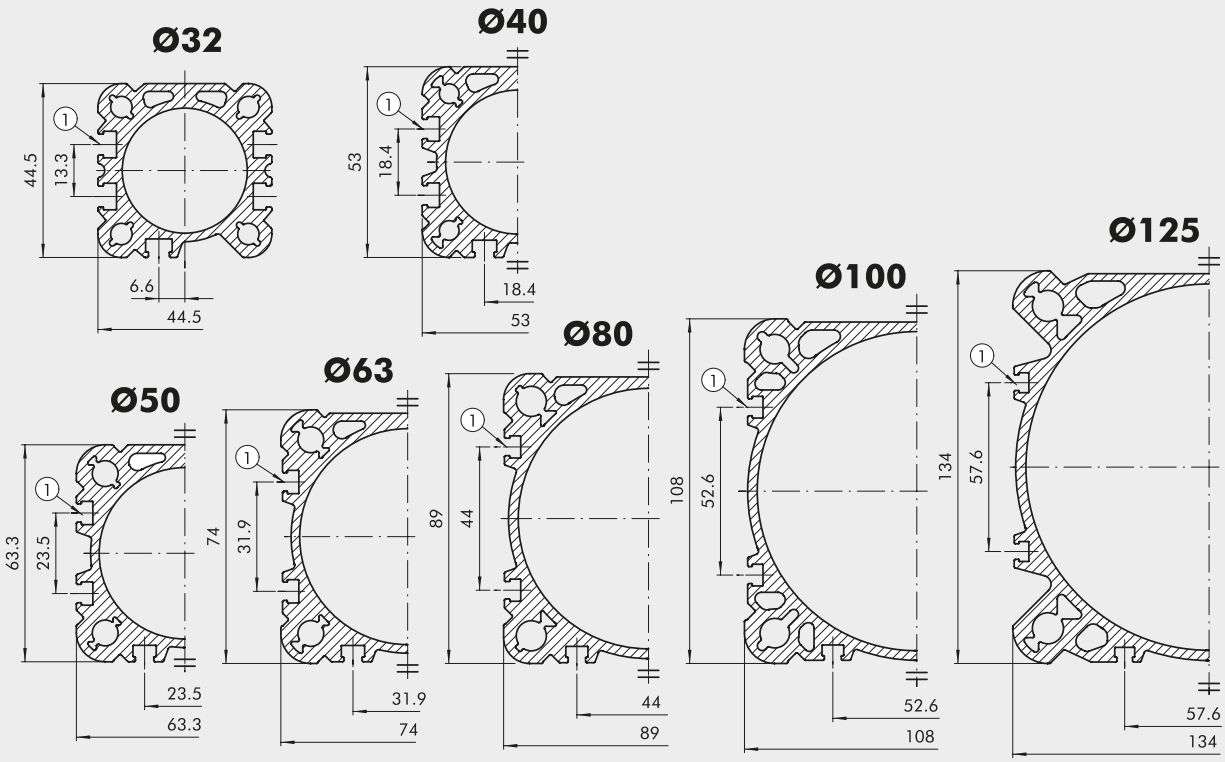

KEY TO CODES CYLINDER ISO 15552 TYPE "A"

CYL	1 2 1	A	3 2	0 0 5 0	C	P	▼ E
	TYPE		BORE	STROKE	MATERIAL	GASKETS	
	121 Double-acting, cushioned ● 122 Through-rod 124 Double-acting, non-cushioned 125 Opposed ✚ 126 Single-acting 127 Tandem 134 Rod lock version ✱ 136 Version with piston rod lock ✱ ◆ 137 Piston rod lock + guide unit	A Standard ▲ B No stick-slip C Non-magnetic	32 40 50 63 80 A1 = Ø 100 A2 = Ø 125	For the maximum suppliable strokes, look at the technical data	A C45 chromed rod, aluminium piston rod: standard for all cylinders with ≥ 1000 mm-stroke cylinders and for cylinder with Ø 80 mm and over C C45 chromed rod, technopolymer piston: standard for cylinders of Ø 32 to 63 mm with <1000 mm strokes Z Stainless steel piston rod and nut aluminium piston X Stainless steel piston rod and nut technopolymer piston	N NBR gaskets P Polyurethane gaskets V FKM/FPM gaskets ● B Low temperature	E Single-acting extended rod

● Only available for versions with aluminium piston (A or Z)
✚ Available until Ø 63 and only the versions with piston in aluminum (A or Z)
126... Single-acting retracted rod
126...E Single-acting extended rod

▼ Letter to be added only to the single acting extended rod version
▲ **For speeds lower than 0.2 m/s, to prevent surging. Use no-lubricated air only**
◆ Available up to Ø 100
✱ Not available for gaskets V or B

KEY TO CODES CYLINDER ISO 15552 LOW-FRICTION TYPE "A"

CYL	1 2 9	A	3 2	0 0 5 0	C	P
		TYPE	BORE	STROKE	MATERIAL	GASKETS
		A Low friction, type A B Low friction, type B C Low friction, type C D Low friction, type D E Low friction, type E F Low friction, type F	32 40 50 63 80 A1 = Ø 100 A2 = Ø 125	Ø 32 to 80 stroke 1 to 2800 mm Ø 100 to 125 stroke 1 to 2600 mm	A C45 chromed rod, aluminium piston rod: standard for all cylinders with ≥1000 mm-stroke cylinders and for cylinder with Ø 80 mm and over C C45 chromed rod, technopolymer piston: standard for cylinders of Ø 32 to 63 mm with <1000 mm strokes Z Stainless steel piston rod and nut aluminium piston X Stainless steel piston rod and nut technopolymer piston	N NBR gaskets P Polyurethane gaskets V FKM/FPM gaskets

KEY TO CODES CYLINDER ISO 15552 LONG-CUSHIONING TYPE "A"

CYL	1 3 0	A	3 2	0 0 5 0	A	P
		TYPE	BORE	STROKE	MATERIAL	GASKETS
		A 200 mm front/rear cushioning cone – 200 mm ext. B 150 mm front/rear cushioning cone – 150 mm ext. C 100 mm front/rear cushioning cone – 100 mm ext. D 150 mm front/rear cushioning cone – 200 mm ext. E 100 mm front/rear cushioning cone – 200 mm ext. F 50 mm front/rear cushioning cone – 100 mm ext. G 100 mm front/rear cushioning cone – 150 mm ext. H 200 mm front cushioning cone – 200 mm ext. I 150 mm front cushioning cone – 150 mm ext. L 100 mm front cushioning cone – 100 mm ext. M 150 mm front cushioning cone – 200 mm ext. N 100 mm front cushioning cone – 150 mm ext. O 50 mm front cushioning cone – 100 mm ext. Q 200 mm rear cushioning cone – 200 mm ext. R 150 mm rear cushioning cone – 150 mm ext. S 100 mm rear cushioning cone – 100 mm ext. T 150 mm rear cushioning cone – 200 mm ext. U 100 mm rear cushioning cone – 200 mm ext. V 50 mm rear cushioning cone – 100 mm ext.	32 40 50 63	1 to 2600 mm	A C45 chromed rod, aluminium piston rod for all sizes Z Stainless steel piston rod and nut aluminium piston	N NBR gaskets P Polyurethane gaskets ✱ V FKM/FPM gaskets

✱ Version valid only for types: Q, R, S, T, U and V.

ISO 15552 LOW-FRICTION CYLINDER (EX ISO 6431) CODE 123 FOR SERIES STD CODE 129 FOR TYPE A

The low-friction cylinder is typically used as a dandy or tensioning cylinder since it is a single-acting cylinder without a return spring.
The configurations are shown below:

1) The best type is A as it involves less friction.
2) Type B should be used when the cylinder is working under normal conditions outside the pneumatic cushioning area.
   Cushioning is only for emergency use. It acts as a shock absorber in the case of malfunction.
3) Type C differs from type A due to the presence of a piston rod gasket that prevents dirt getting in when operating in dirty environments.
4) Type D differs from type B due to the presence of a piston rod gasket that prevents dirt getting in when operating in dirty environments.
5) Type E should be used when the pressurized chamber is the front one.
6) For type F, see point 2.

NB. THE CYLINDER IS ALWAYS SINGLE-ACTING WITHOUT A RETURN SPRING.

	TYPE	GASKETS
Rear chamber pressure	A	1
Rear chamber pressure and cushioning in case of impact	B	1+3
Rear chamber pressure and piston rod gasket	C	1+5
Rear chamber pressure, cushioning in case of impact and piston rod gasket	D	1+3+5
Front chamber pressure	E	2+5
Front chamber pressure and cushioning in case of impact	F	2+5+4

COMPONENTS

① Rear chamber piston gasket made of polyurethane, NBR or FKM/FPM
② Front chamber piston gasket made of polyurethane, NBR or FKM/FPM
③ Rear chamber cushioning gasket made of polyurethane, NBR or FKM/FPM
④ Front chamber cushioning gasket made of polyurethane, NBR or FKM/FPM
⑤ Piston rod gasket made of polyurethane, NBR or FKM/FPM

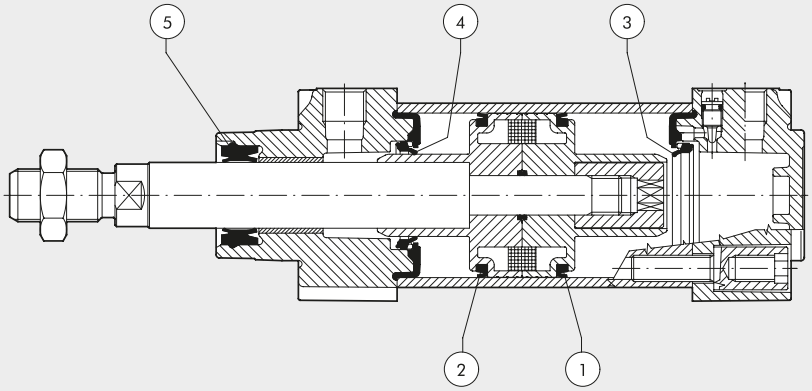

ISO 15552 ULTRA-LOW FRICTIONS CYLINDER (EX ISO 6431)

A typical ultra-low friction cylinder is generally used as an oscillating or tensioning cylinder. It is single acting, in the sense that compressed air is normally fed into one of the two chambers only. An external force acts on the other side. Metal Work's ultra-low friction cylinder is designed as a double-acting one, which means the compressed air can be fed into the rear or either the front chamber. They are built to comply with ISO 15552 and are available with or without a magnet.
Supplied with a series 3 barrel.
A through-rod version is not available.
These cylinders are always non-cushioned.
The gaskets are made of NBR.
A full range of accessories is available.

TECHNICAL DATA		NBR
Max operating pressure	bar	10
	MPa	1
	psi	145
Temperature range	°C	–10 to +80
Fluid		Unlubricated air
Bore	mm	32; 40; 50; 63; 80; 100; 125
Standard stroke	mm	1 to 1200
Design		Heads with Tap Tite screws
Versions		Double-acting magnetic, Double-acting non-magnetic (always "No stick-slip" cylinder)
Sensor magnet		All the versions with or without magnet
Inrush pressure	bar	Ø 32 = 0.08
		Ø 40 = 0.06
		Ø 50 = 0.05
		Ø 63 = 0.04
		Ø 80 = 0.03
		Ø 100 = 0.03
		Ø 125 = 0.03
Forces generated at 6 bar thrust/retraction		See cylinder "**General technical data**" at the beginning of the chapter
Weights		See cylinder "**General technical data**" at the beginning of the chapter
Notes		There may be leakage between the two chambers in the presence of low pressures (up to 1 bar)

COMPONENTS

① PISTON ROD: C45 steel or stainless steel, thick chromed
② HEAD: die cast aluminium
③ PISTON ROD GASKET: NBR
④ GUIDE BUSHING: steel strip with bronze insert
⑤ BARREL: drawn anodized calibrated aluminium
⑥ PISTON GASKET: NBR
⑦ HALF-PISTON: aluminium alloy
⑧ MAGNET: plastoferrite
⑨ GUIDE RING: special technopolymer
⑩ BUFFER + Static O-rings: NBR
⑪ CUSHIONING NEEDLE: OT 58 with needle out movement safety system even when fully open
⑫ SCREWS: Tap Tite for assembly

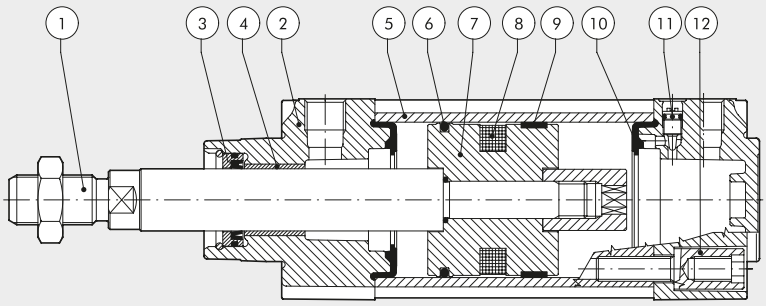

DIAGRAM OF THE CLEAN FRICTIONS

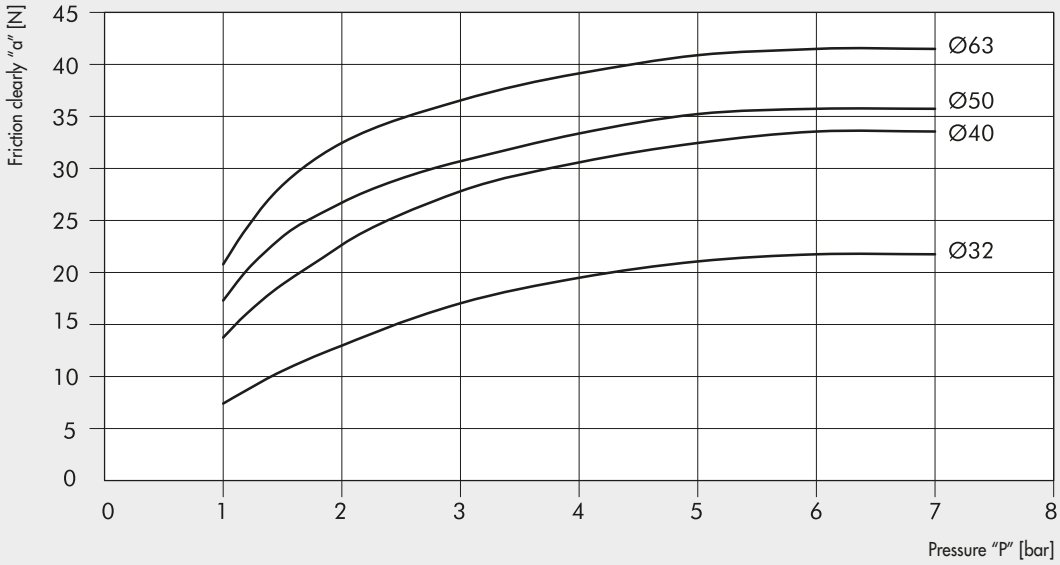

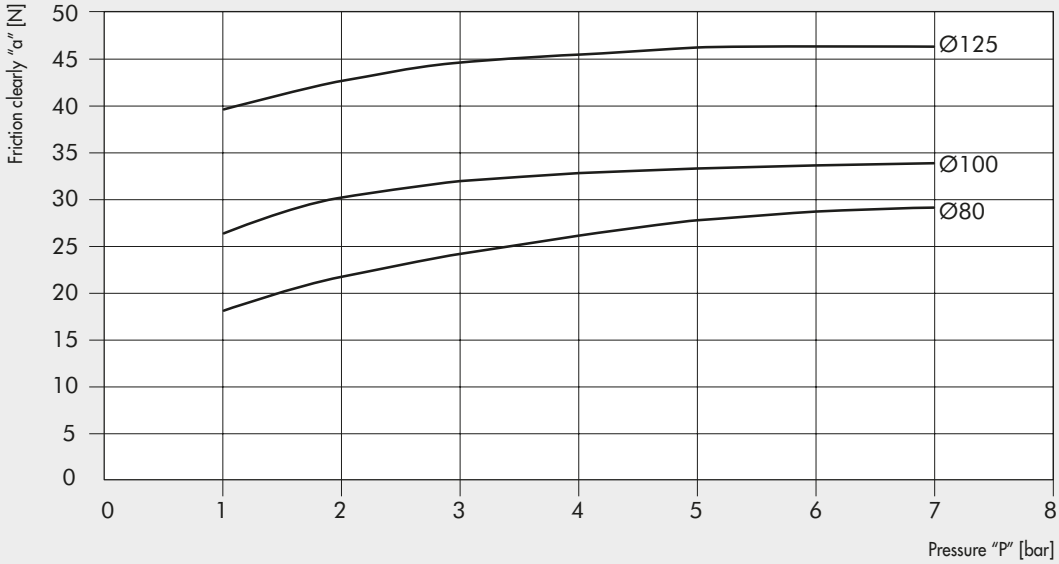

The clean friction values "a" in N have been obtained by inserting in the back chamber the pressure "P" in bars, and simultaneously by detecting the necessary force "F" in N to make the rod re-enter, applying the following formula:

$a = F - [(P \times S) \times 9.81]$

where "S" is the thrust section in cm^2

KEY TO CODES

CYL	1 2 3	3	3 2	0 1 0 0	A	N
	TYPE		BORE	STROKE	MATERIAL	GASKETS
	123 Ultra-low friction	**3** Double-acting magnetic **5** Double-acting not magnetic	32 40 50 63 80 A1 = 100 A2 = 125	From 1 to 1200 mm	**A** C45 chromed rod, aluminium piston rod **Z** Stainless steel piston rod and nut aluminium piston	**N** NBR gaskets

ALL the cylinders are No stick-slip.
ALL the cylinders are non-cushioned.
Ultra-low friction cylinders are not available in the through-rod version.

ISO 15552 CYLINDER WITH "COMBI" PISTON ROD GASKET (EX ISO 6431)

In some applications the piston rod is exposed to pollutants and dirt, which tend to adhere to the surface.
Ordinary gaskets are made of relatively soft elastomers as their main job is to provide a pneumatic seal. In critical applications they are unable to scrape dirt off the surface of the piston rod.
COMBI piston rod gaskets are designed to solve these problems.
They are made up of two separate parts:

- **a sealing element,** inside the cylinder, made of a special NBR elastomer with a Shore A hardness of 80 to provide a pneumatic seal.
- **a scraper ring,** outside the cylinder, made of highly wear-resistant plastic.

FEATURES AND ADVANTAGES

COMBI gaskets have three functions - sealing, scraping and securing. The outer projection of the scraper ring secures the cylinder head in its seat, so steel retaining rings are not required. This eliminates the risk of corrosion due to the presence of metal.
Friction is reduced. The materials used in the scraper ring and sealing element make the gasket extremely long lasting.
Cylinders with COMBI gaskets can be used with unlubricated dry air.
The cylinder head seat is the same as for other Metal Work cylinder gaskets, so the cylinder head is standard.

OPERATING PRINCIPLE

The gasket is housed in the cylinder head ①. Inside the cylinder there is compressed air ③. Dirt ④ deposits on the piston rod ②.
The sealing element ⑤ provides the pneumatic seal. The scraper ring ⑥ cleans the piston rod. The projection ⑦ on the scraper ring secures the gasket in the cylinder head seat.

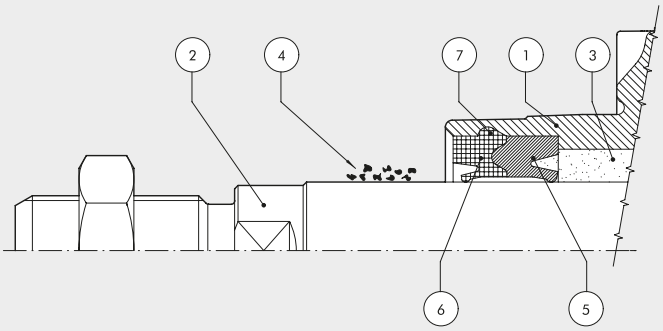

TECHNICAL DATA

Bores: 32; 40; 50; 63; 80; 100; 125.

The same as for ISO 15552 cylinders with NBR gaskets.
Maximum recommended speed: 1 m/s.

KEY TO CODES

The codes for ISO 15552 cylinders apply, the last letter C identifying the type of gasket.
"Long cushioning" version not provided.

Example:
1210320100CC: ISO 15552 cylinder, dual-acting, cushioned, magnetic, diameter 32, stroke 100 mm, piston rod made of C45 chrome, COMBI piston rod gasket, other gaskets NBR.

ISO 15552 CYLINDER DIMENSIONS

DIMENSIONS

STANDARD VERSION

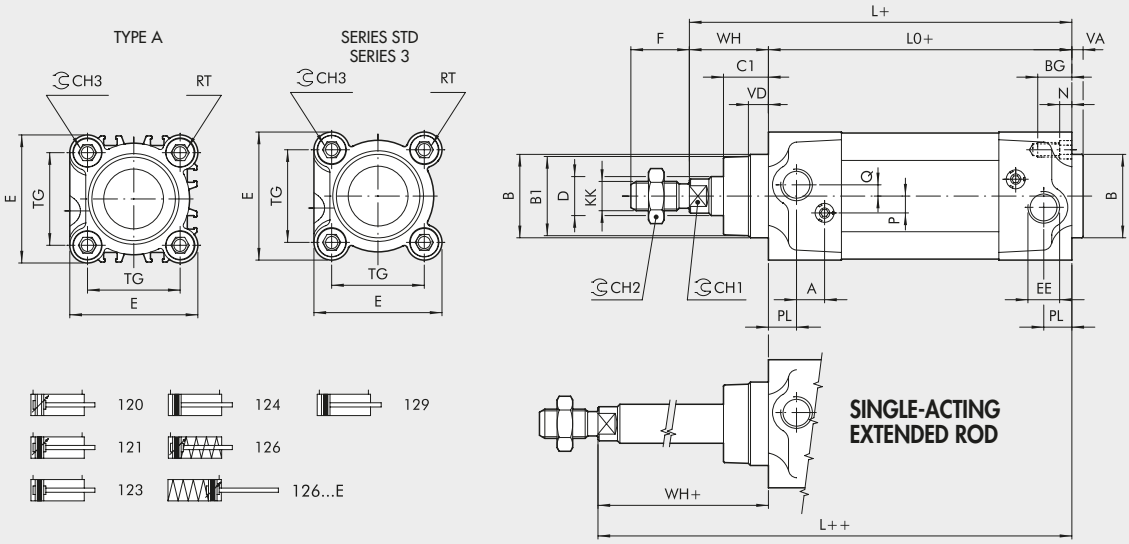

+ = ADD THE STROKE
++ = ADD TWICE THE STROKE

THROUGH-ROD VERSION

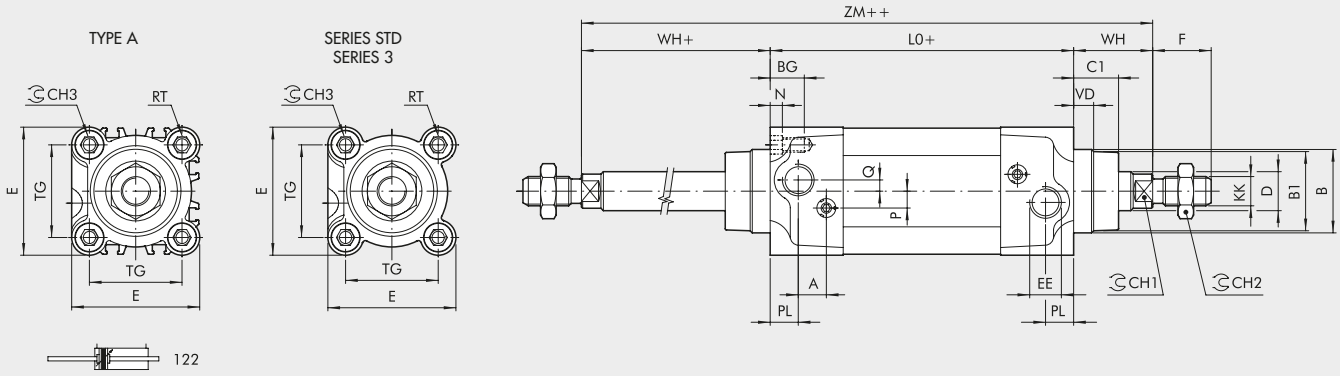

Ø	PL	VD	A	B	B_1	WH	C_1	CH_1	CH_2	CH_3	KK	D	TG	VA	F	EE	RT	E	L	L_0	ZM	BG	N	P	Q
32	10	6.5	10	30	28	26	16	10	17	6	M10x1.25	12	32.5	4	22	G1/8	M6	46	120	94	146	14.5	4.5	6	4
40	12	8	10	35	33	30	20	13	19	6	M12x1.25	16	38	4	24	G1/4	M6	54	135	105	165	14.5	4.5	6	4
50	14	13	10	40	38	37	25	17	24	8	M16x1.5	20	46.5	4	32	G1/4	M8	64.5	143	106	180	17.5	5.5	6	6
63	16	14	10	45	40	37	25	17	24	8	M16x1.5	20	56.5	4	32	G3/8	M8	75.5	158	121	195	17.5	5.5	6	6
80	18	12	12	45	43	46	33	22	30	10	M20x1.5	25	72	4	40	G3/8	M10	94	174	128	220	21.5	5.5	10	7
100	20	14	12	55	49	51	38	22	30	10	M20x1.5	25	89	4	40	G1/2	M10	111	189	138	240	21.5	5.5	10	7
125	25	20	10	60	54	65	45	27	41	12	M27x2	32	110	6	54	G1/2	M12	135	225	160	290	25.5	6.5	12	8

VERSION 126 ... (SINGLE-ACTING RETRACTED ROD)
VERSION 126...E (SINGLE-ACTING EXTENDED ROD)

			L0								L							
			Ø 32		Ø 40		Ø 50		Ø 63		Ø 32		Ø 40		Ø 50		Ø 63	
Stroke	126...	126...E	126...	126...E	126...	126...E	126...	126...E	126...	126...E	126...	126...E	126...	126...E	126...	126...E	126...	126...E
0 - 25	ISO	ISO	94	94	105	105	106	106	121	121	120	120	135	135	143	143	158	158
26 - 50	ISO	NON ISO	94	115	105	129.5	106	130.5	121	145.5	120	141	135	159.5	143	167.5	158	182.5
51 - 75	NON ISO	NON ISO	115	136	129.5	154	130.5	155	145.5	170	141	162	159.5	184	167.5	192	182.5	207
76 - 100	NON ISO	NON ISO	136	157	154	178.5	155	179.5	170	194.5	162	183	184	208.5	192	216.5	207	231.5
101 - 125	NON ISO	NON ISO	157	178	178.5	203	179.5	204	194.5	219	183	204	208.5	233	216.5	241	231.5	256
126 - 150	NON ISO	NON ISO	178	199	203	227.5	204	228.5	219	243.5	204	225	233	257.5	241	265.5	256	280.5
151 - 175	NON ISO	NON ISO	199	220	227.5	252	228.5	253	243.5	268	225	246	257.5	282	265.5	290	280.5	305
176 - 200	NON ISO	NON ISO	220	241	252	276.5	253	277.5	268	292.5	246	267	282	306.5	290	314.5	305	329.5
201 - 225	NON ISO	NON ISO	241	262	276.5	301	277.5	302	292.5	317	267	288	306.5	331	314.5	339	329.5	354
226 - 250	NON ISO	NON ISO	262	283	301	325.5	302	326.5	317	341.5	288	309	331	355.5	339	363.5	354	378.5

DIMENSIONS CUSHIONING VERSION

+ = ADD THE STROKE

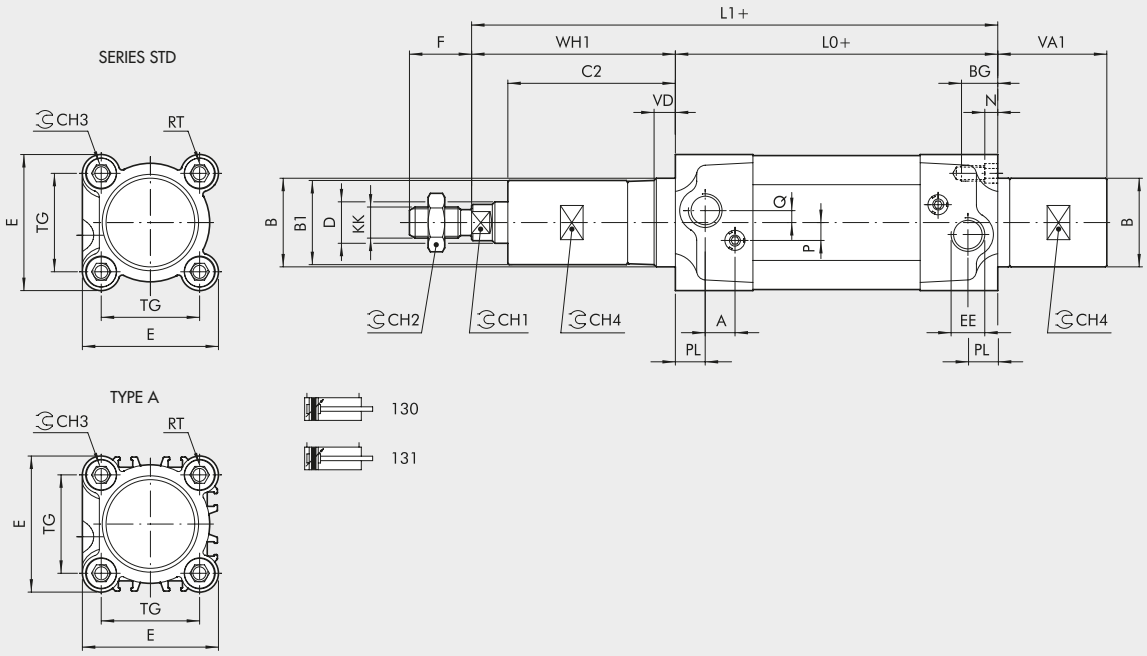

Ø	PL	VD	A	B	B_1	CH_1	CH_2	CH_3	CH_4	KK	D	TG	F	EE	RT	E	L_0	BG	N	P	Q
32	10	6.5	10	30	29	10	17	6	27	M10x1.25	12	32.5	22	G1/8	M6	46	94	14.5	4.5	6	4
40	12	8	10	35	34	13	19	6	30	M12x1.25	16	38	24	G1/4	M6	54	105	14.5	4.5	6	4
50	14	13	10	40	38	17	24	8	35	M16x1.5	20	46.5	32	G1/4	M8	64.5	106	17.5	5.5	6	6
63	16	14	10	45	38	17	24	8	35	M16x1.5	20	56.5	32	G3/8	M8	75.5	121	17.5	5.5	6	6

100 mm CUSHIONING

Ø	WH_1	C_2	VA_1	L_1
32	106	96	79	200
40	107	97	76.5	212
50	113.5	101.5	76.5	219.5
63	113.5	101.5	76.5	234.5

150 mm CUSHIONING

Ø	WH_1	C_2	VA_1	L_1
32	156	146	129	250
40	157	147	121.5	262
50	162.5	150.5	119.5	268.5
63	162.5	150.5	123.5	283.5

200 mm CUSHIONING

Ø	WH_1	C_2	VA_1	L_1
32	206	196	179	300
40	207	197	176.5	312
50	213.5	201.5	176.5	319.5
63	213.5	201.5	176.5	334.5

ACCESSORIES FOR ISO 15552 STD, TYPE A, SERIES 3, TWO-FLAT:

FIXINGS

METAL WORK PNEUMATIC

FOOT - MODEL A

+ = ADD THE STROKE

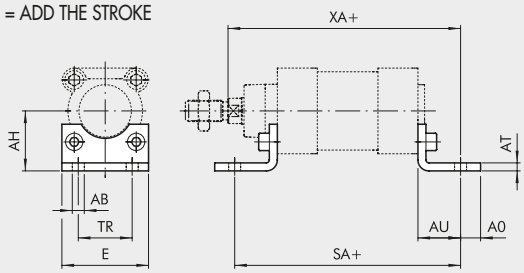

Code	Ø	Ø AB	AH	AO	AT	AU	TR	E	XA	SA	Weight [g]
W0950322001	32	7	32	11	4	24	32	45	144	142	76
W0950402001	40	9	36	15	4	28	36	52	163	161	100
W0950502001	50	9	45	15	4	32	45	65	175	170	162
W0950632001	63	9	50	15	6	32	50	75	190	185	266
W0950802001	80	12	63	20	6	41	63	95	215	210	456
W0951002001	100	14	71	25	6	41	75	115	230	220	572
W0951252001	125	16	90	15	7	45	90	140	270	250	1130

Note: Individually packed with 2 screws

FEMALE HINGE - MODEL B

+ = ADD THE STROKE

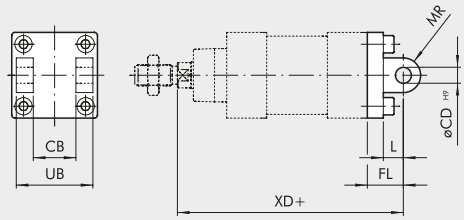

Code	Ø	UB	CB	FL	øCD	XD	MR	L	Weight [g]
W0950322003	32	45	26	22	10	142	10	12	116
W0950402003	40	52	28	25	12	160	12	15	160
W0950502003	50	60	32	27	12	170	12	15	252
W0950632003	63	70	40	32	16	190	16	20	394
W0950802003	80	90	50	36	16	210	16	20	670
W0951002003	100	110	60	41	20	230	20	25	1085
W0951252003	125	130	70	50	25	275	25	30	2000

Note: Supplied with 4 screws, 4 washers, 2 snap-rings, 1 pin

MALE HINGE - MODEL BA

+ = ADD THE STROKE

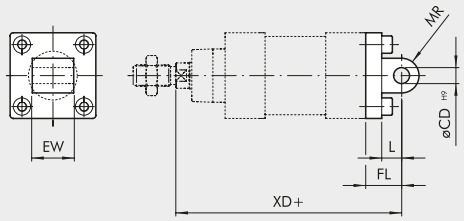

Code	Ø	EW	FL	MR	øCD	L	XD	Weight [g]
W0950322004	32	26	22	11	10	12	142	94
W0950402004	40	28	25	13	12	15	160	124
W0950502004	50	32	27	13	12	15	170	220
W0950632004	63	40	32	17	16	20	190	316
W0950802004	80	50	36	17	16	20	210	578
W0951002004	100	60	41	21	20	25	230	850
W0951252004	125	70	50	26	25	30	275	1590

Note: Supplied with 4 screws

ARTICULATED MALE HINGE - MODEL BAS

+ = ADD THE STROKE

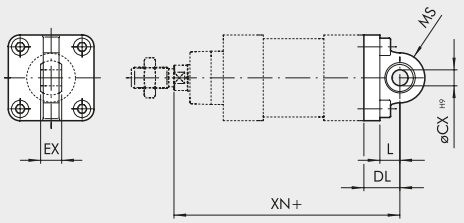

Code	Ø	DL	MS	L	XN	øCX	EX	Weight [g]
W0950322006	32	22	16	12	142	10	14	106
W0950402006	40	25	18	15	160	12	16	142
W0950502006	50	27	21	15	170	12	16	236
W0950632006	63	32	23	20	190	16	21	336
W0950802006	80	36	28	20	210	16	21	572
W0951002006	100	41	30	25	230	20	25	840
W0951252006	125	50	40	30	275	25	31	1520

Note: Supplied with 4 screws

CETOP HINGE FOR MODEL B - MODEL GL

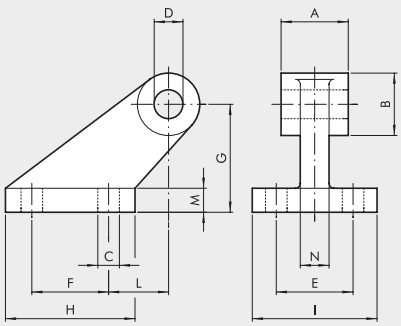

Code	Ø	A	B	C	D	E	F	G	H	I	L	M	N	Weight [g]
W0950322008	32	26	19	7	10	25	20	32	37	41	18	8	10	96
W0950402008	40	28	26	9	12	32	32	45	54	52	25	10	12	216
W0950502008	50	32	26	9	12	32	32	45	54	52	25	10	12	212
W0950632008	63	40	33	11	16	40	50	63	75	63	32	12	15	440
W0950802008	80	50	33	11	16	40	50	63	75	63	32	12	15	464
W0951002008	100	60	44	14	20	50	70	90	103	80	40	16	22	985
W0951252008	125	70	44	14	25	50	70	90	103	80	40	16	22	1000

Note: Supplied with 4 screws, 4 washers

COUNTER-HINGE FOR MODEL B - MODEL GS

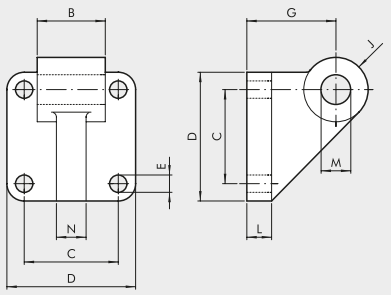

Code	Ø	B	C	D	E	G	J	L	M	N	Weight [g]
W0950322108	32	25.5	32.5	45	7	32	11	10	10	10	106
W0950402108	40	27.5	38	52	7	36	13	10	12	12	138
W0950502108	50	31.5	46.5	65	9	45	13	12	12	12	252
W0950632108	63	39.5	56.5	75	9	50	17	12	16	15	350
W0950802108	80	49.5	72	95	11	63	17	16	16	15	655
W0951002108	100	59.5	89	115	11	73	21	16	20	22	980

Note: Supplied with 4 screws, 4 washers

ISO 15552 COUNTER-HINGE FOR MODEL B - MODEL AB7

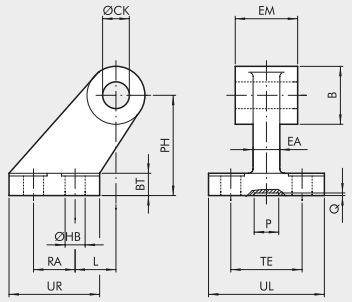

Code	Ø	EM	B	ØHB	ØCK	TE	RA	PH	UR	UL	L	BT	EA	P	Q	Weight [g]
W0950322017	32	26	20	6.6	10	38	18	32	31	51	3	8	10	21	3	60
W0950402017	40	28	22	6.6	12	41	22	36	35	54	2	10	15*	21	3	85
W0950502017	50	32	26	9	12	50	30	45	45	65	3	12	16	21	3	162
W0950632017	63	40	30	9	16	52	35	50	50	67	2	14*	16	21	3	191
W0950802017	80	50	30	11	16	66	40	63	60	86	7	14	20	21	3	332
W0951002017	100	60	38	11	20	76	50	71	70	96	5	17*	20	11	3	522
W0951252017	125	70	45	14	25	94	60	90	90	124	10	20	30	21	3	960

* Dimensions not to ISO 15552

FRONT FLANGE - MODEL C

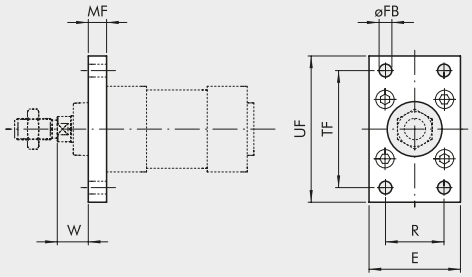

Code	Ø	TF	UF	E	MF	R	øFB	W	Weight [g]
W0950322002	32	64	80	50	10	32	7	16	246
W0950402002	40	72	90	55	10	36	9	20	290
W0950502002	50	90	110	65	12	45	9	25	522
W0950632002	63	100	120	75	12	50	9	25	670
W0950802002	80	126	153	95	16	63	12	30	1420
W0951002002	100	150	178	115	16	75	14	35	2040
W0951252002	125	180	220	140	20	90	16	45	4300

Note: Supplied with 4 screws

REAR FLANGE - MODEL C

+ = ADD THE STROKE

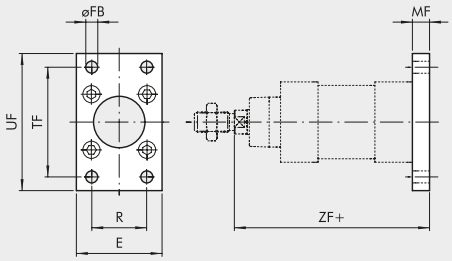

Code	Ø	TF	UF	E	MF	R	øFB	ZF	Weight [g]
W0950322002	32	64	80	50	10	32	7	130	246
W0950402002	40	72	90	55	10	36	9	145	290
W0950502002	50	90	110	65	12	45	9	155	522
W0950632002	63	100	120	75	12	50	9	170	670
W0950802002	80	126	153	95	16	63	12	190	1420
W0951002002	100	150	178	115	16	75	14	205	2040
W0951252002	125	180	220	140	20	90	16	245	4300

Note: Supplied with 4 screws.

ROD NUT - MODEL S

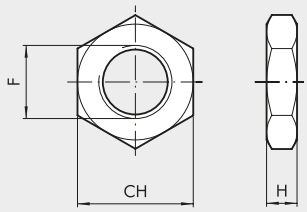

Code	Ø	F	H	CH	Weight [g]
0950322010	32	M10x1.25	6	17	6
0950402010	40	M12x1.25	7	19	12
0950502010	50/63	M16x1.5	8	24	20
0950802010	80/100	M20x1.5	9	30	32
0951252010	125	M27x2	12	41	74

Note: Individually packed

METAL WORK PNEUMATIC

FORK MODEL GK-M

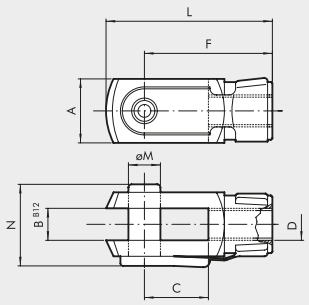

Code	Ø	øM	C	B	A	L	F	D	N	Weight [g]
W0950322020	32	10	20	10	20	52	40	M10x1.25	26	92
W0950402020	40	12	24	12	24	62	48	M12x1.25	32	148
W0950502020	50	16	32	16	32	83	64	M16x1.5	40	340
W0950502020	63	16	32	16	32	83	64	M16x1.5	40	340
W0950802020	80	20	40	20	40	105	80	M20x1.5	48	690
W0950802020	100	20	40	20	40	105	80	M20x1.5	48	690
W0951252020	125	30	54	30	55	148	110	M27x2	65	1835

Note: Individually packed

ROD EYE - MODEL GA-M

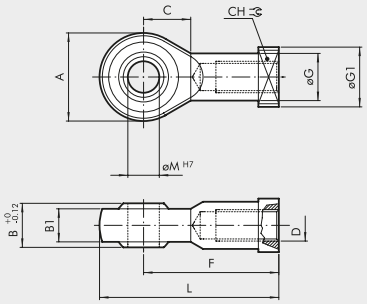

Code	Ø	øM	C	B1	B	A	L	F	D	øG	CH	øG1	Weight [g]
W0950322025	32	10	15	10.5	14	28	57	43	M10x1.25	15	17	19	78
W0950402025	40	12	17	12	16	32	66	50	M12x1.25	17.5	19	19	116
W0950502025	50	16	22	15	21	42	85	64	M16x1.5	22	22	22	226
W0950502025	63	16	22	15	21	42	85	64	M16x1.5	22	22	22	226
W0950802025	80	20	26	18	25	50	102	77	M20x1.5	27.5	30	27	404
W0950802025	100	20	26	18	25	50	102	77	M20x1.5	27.5	30	27	404
W0951252025	125	30	36	25	37	70	145	110	M27x2	40	41	50	1190

Note: Individually packed

SELF ALIGNING ROD COUPLER - MODEL GA-K

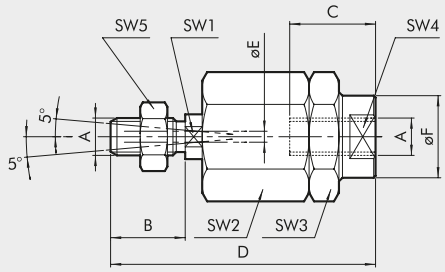

Code	Ø	A	B	C	D	øF	øE	SW_1	SW_2	SW_3	SW_4	SW_5	Weight [g]
W0950322030	32	M10x1.25	20	20	71	22	4	12	30	30	19	17	216
W0950402030	40	M12x1.25	24	20	75	22	4	12	30	30	19	19	220
W0950502030	50	M16x1.5	32	32	103	32	4	20	41	41	30	24	620
W0950502030	63	M16x1.5	32	32	103	32	4	20	41	41	30	24	620
W0950802030	80	M20x1.5	40	40	119	32	4	20	41	41	30	30	680
W0950802030	100	M20x1.5	40	40	119	32	4	20	41	41	30	30	680

Note: Individually packed

NOTES

ACCESSORIES FOR ISO 15552 CYLINDERS: GUIDE UNITS

Guide units series DS-DH-DM ensure optimal alignment and anti-rotation effect of the pneumatic cylinder connected to it. The guide units can be used separately or combined in order to get complete handling units, in which case the guide units can be coupled using the type A and C anchorage (pin and flange).
The guide units can be coupled to ISO 15552 cylinders (Ø 32 to 100).
The following versions are available:
U PROFILE (GDS)*: for limited loads and speeds
H PROFILE (GDH)*: for high loads
H PROFILE (GDM)**: for high speeds

* With bronze guide bushing
** With ball guide bushing

STANDARD STROKES: 50 - 100 - 150 - 200 - 250 - 320 - 400 - 500

For weights, see cylinder "**General technical data**" at the beginning of the chapter.

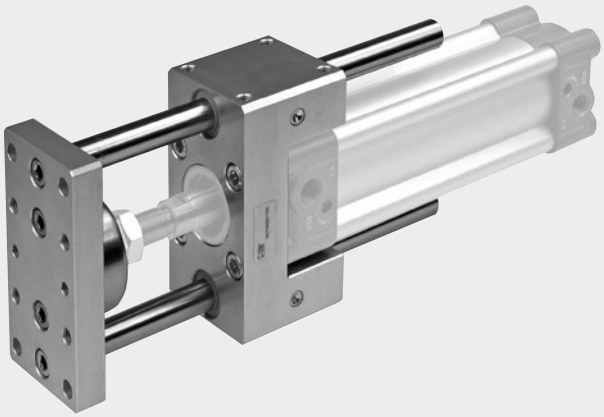

COMPONENTS

SERIES GDS-GDH	Body:	aluminium alloy
	Guide bushing:	self-lubricating sintered bronze and wiper rings
	Piston rod:	chromed rolled steel
SERIES GDM	Body:	aluminium alloy
	Guide bushing:	ball linear bearings and scraper ring
	Piston rod:	tempered stainless steel

GRAPH OF GUIDE UNIT LOADS

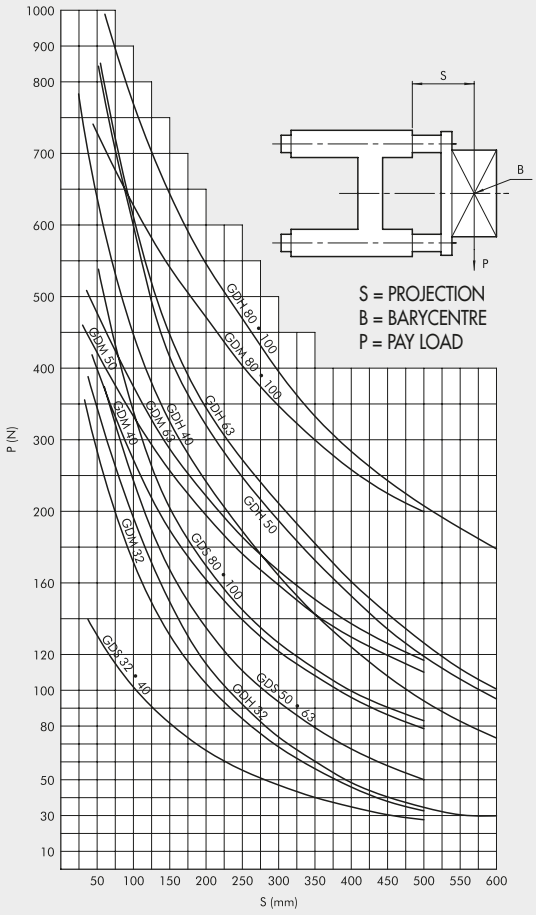

DIMENSIONS TYPE GDS

+ = ADD THE STROKE
✱ = CENTERING PINHOLES

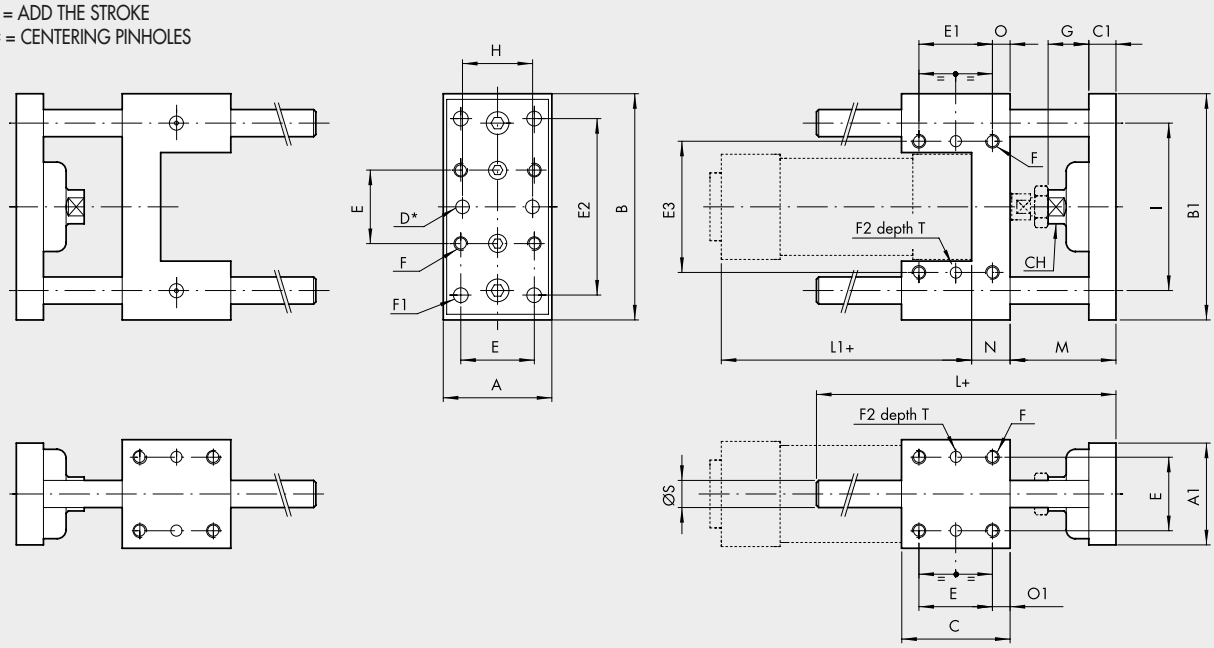

Ø	A	A_1	B	B_1	C	C_1	D^{H7}	E	E_1	E_2	E_3	F	F_1	F_2^{H7}	G	H	I	L	L_1	M	N	O	O_1	Ø S	CH	T
32	48	45	100	95	48	12	6	32.5	32.5	78	58	M6	6.5	6	18	31	74	108	94	46	17	7.8	7.8	12	15	7
40	56	53	106	101	58	15	6	38	38	84	64	M6	6.5	6	21	36	80	120	105	52	21	10	10	12	15	7
50	66	63	125	120	59	15	6	46.5	46.5	100	80	M8	8.5	6	24	45	96	130	106	65	25	6.3	6.3	16	22	7
63	76	73	132	127	76	15	6	56.5	56.5	105	95	M8	8.5	6	24	45	104	145	121	65	25	9.8	9.8	16	22	7
80	98	95	165	160	90	16	6	72	50	130	130	M10	11	6	31	56	130	170	128	71	34	20	9	20	27	10
100	118	115	185	180	110	16	6	89	70	150	150	M10	11	6	31	56	152	190	138	71	39	20	10.5	20	27	10

DIMENSIONS TYPE GDH-GDM

+ = ADD THE STROKE
✱ = CENTERING PINHOLES

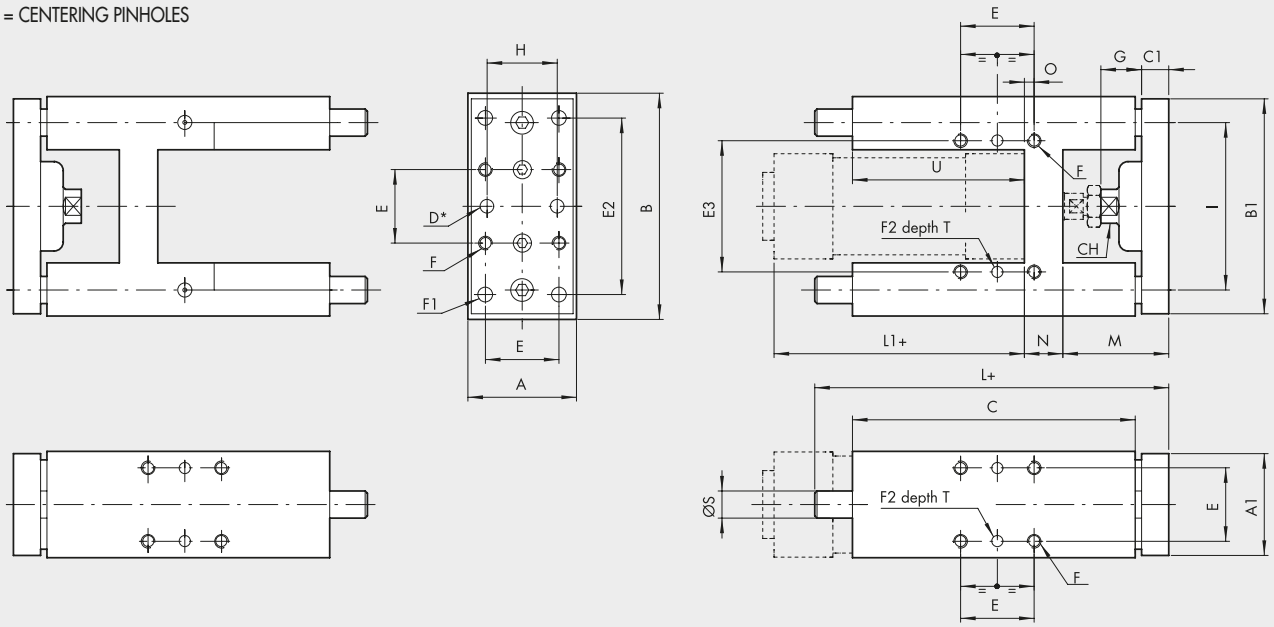

Ø	A	A_1	B	B_1	C	C_1	CH	D^{H7}	E	E_2	E_3	F	F_1	F_2^{H7}	G	H	I	L	L_1	M	N	O	Ø S	U	T
32	49	45	97	90	125	12	13	6	32.5	78	61	M6	6.5	6	18	31	74	177	94	48	17	4.3	12	76	7
40	58	54	115	110	139	15	15	6	38	84	69	M6	6.5	6	21	36	87	192	105	53	21	11	16	81	7
50	69	63	137	130	148	15	22	6	46.5	100	85	M8	8.5	6	24	45	104	205	106	63	26	18.5	20	78	7
63	85	79	152	145	182	15	22	6	56.5	105	100	M8	8.5	6	24	45	119	237	121	62	26	15.3	20	111	7
80	105	99	189	180	215	20	27	6	72	130	130	M10	11	6	31	56	148	280	128	76	34	21	25	128	10
100	129	120	213	200	220	20	27	6	89	150	150	M10	11	6	31	56	172	280	138	76	39	24.5	25	128	10

ORDER CODE GUIDE UNIT

Version	Code	Bore	Type
Sliding on bronze bushings (GDS)	**W0700321...**	32	UNIT MW DS 032...
	W0700401...	40	UNIT MW DS 040...
	W0700501...	50	UNIT MW DS 050...
	W0700631...	63	UNIT MW DS 063...
	W0700801...	80	UNIT MW DS 080...
	W0701001...	100	UNIT MW DS 100...
Sliding on bronze bushings (GDH)	**W0700322...***	32	UNIT MW DH 032...
	W0700402...*	40	UNIT MW DH 040...
	W0700502...	50	UNIT MW DH 050...
	W0700632...	63	UNIT MW DH 063...
	W0700802...	80	UNIT MW DH 080...
	W0701002...	100	UNIT MW DH 100...
	* Also available in V-Lock version (see **chapter A3**).		
Sliding on ball bearing (GDM)	**W0700323...***	32	UNIT MW DM 032...
	W0700403...*	40	UNIT MW DM 040...
	W0700503...	50	UNIT MW DM 050...
	W0700633...	63	UNIT MW DM 063...
	W0700803...	80	UNIT MW DM 080...
	W0701003...	100	UNIT MW DM 100...
	* Also available in V-Lock version (see **chapter A3**).		

Note: To complete the type and code, add the 3-digit stroke (e.g. 50=050)

DIMENSIONS PISTON ROD LOCK + GUIDE UNIT COD. 137

Ø	C
32	74
40	85
50	107
63	107
80	136
100	143

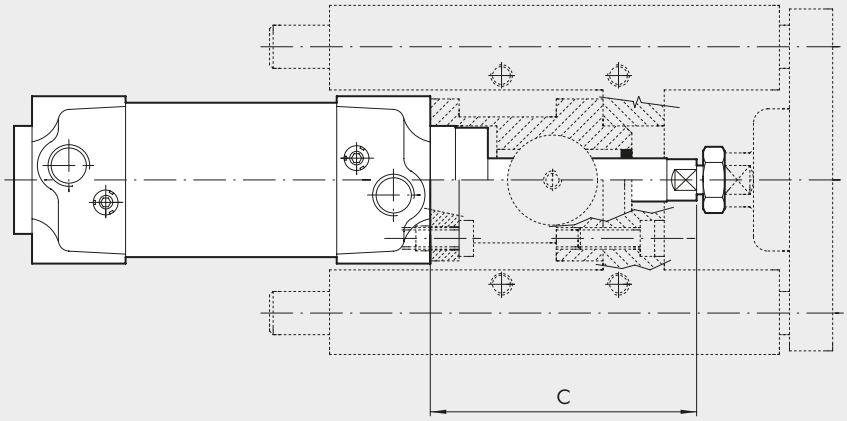

ACCESSORIES FOR ISO 15552 CYLINDERS: MAGNETIC SENSORS AND POSITION SENSOR

METAL WORK PNEUMATIC

RETRACTABLE SENSOR

SENSOR, SQUARE TYPE
Latest generation,
secure fixing

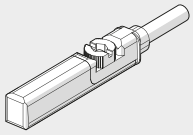

SENSOR, OVAL TYPE
Traditional

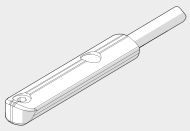

For codes and technical data, see **chapter A6**.

SENSOR SERIES DSM

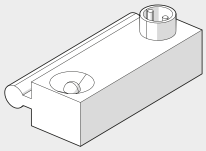

Can be used on ISO 15552 cylinders in the STD series and series 3.
For codes and technical data, see **chapter A6**.

SENSOR SUPPORT BRACKETS FOR SENSORS SQUARE TYPE AND OVAL TYPE

Ø 32 to 40

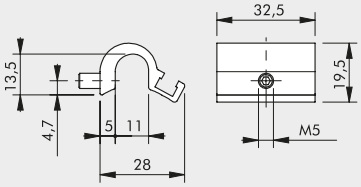

Code	Description
W0950001711	Bracket D.32-40

Ø 50 to 63

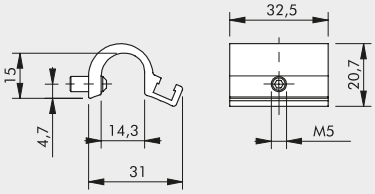

Code	Description
W0950001712	Bracket D.50-63

Ø 80 to 125

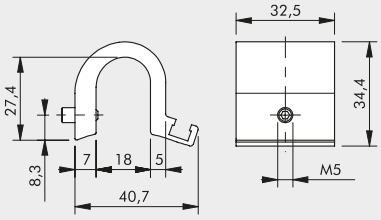

Code	Description
W0950001713	Bracket D.80-100-125

SENSOR SUPPORT BRACKETS FOR SENSORS DSM

Ø 32 to 40

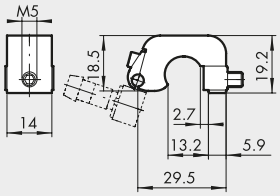

Code	Description
W0950000711	Bracket D.32-40 DST 80

Ø 50 to 63

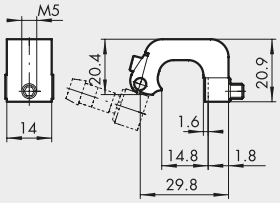

Code	Description
W0950000712	Bracket D.50-63 DST 81

Ø 80 to 125

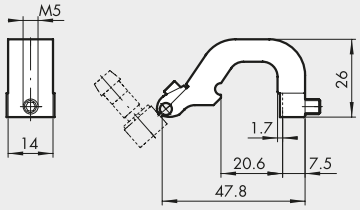

Code	Description
W0950000713	Bracket D.80-100-125 DST 82

POSITION SENSOR

LTS

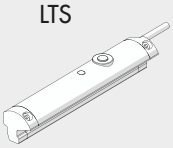

LTL

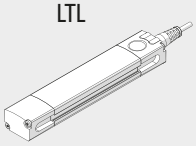

Model	For ISO 15552 cylinders
LTS	type A - series 3
LTL	type A

For technical data and usage strokes see **chapter A6**.

ADAPTER FOR OVAL TYPE RETRACTABLE SENSORS

ASSEMBLY DIAGRAM

① ISO 15552 cylinder with serie STD or serie 3 barrel
② Sensor bracket mod. DST (Ø 32 to 125)
③ Adaptor
④ Retractable sensor "oval type"

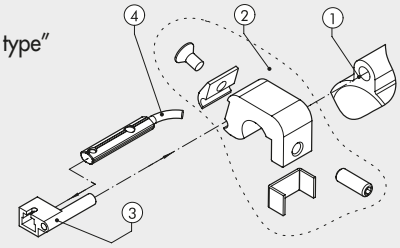

Code	Description
W0950001001	Adaptor DSS005 for DST/ST brackets