ISO 15552 CYLINDER – SERIES HCR (High Corrosion Resistance)

METAL WORK PNEUMATIC

In some applications, the cylinders are exposed to aggressive environments (e.g. the dairy, fruit & vegetable and food industry) or to substances and washings with aggressive detergents (e.g. caustic soda, hydrochloric acid and lactic acid).
Under these conditions, the HCR series cylinders ensure better corrosion resistance.
Cylinders made to ISO 15552, designed and built with materials and/or surface treatments that are highly resistant to corrosion.
They come in various versions and with a specific range of accessories:
- with or without magnet
- with single or through piston rod

Also available with liner in the STD series or series 3.

TECHNICAL DATA

Max operating pressure	bar	10
	MPa	1
	psi	145
Temperature range	°C	–10 to +60
Resistance in corrosive environments at 20°C		Basic solution (sodium hydroxide - pH max 12)
		Acid solution (hydrochloric acid - pH min. 2.5)
		Salt mist testing to DIN 50021-SS, 500 hours
Fluid		Unlubricated air. Lubrication, if used, must be continuous
Bores	mm	32; 40; 50; 63; 80; 100; 125
Standard strokes	mm	For bores 32 to 80 strokes from 1 to 2800
		for bores 100 to 125 strokes from 1 to 2600
Versions		Double-acting, Double-acting cushioned, Through-rod cushioned
		(magnetic and non-magnetic versions are available for each type)
Gaskets		Piston rod gaskets made of polyurethane, other gaskets in NBR
Forces generated at 6 bar thrust/retraction		See cylinder "**General technical data**" at the beginning of the chapter
Weights		See cylinder "**General technical data**" at the beginning of the chapter

COMPONENTS

① PISTON ROD: AISI 316, thickness-chromed
② HEAD: anodized pressure die-cast aluminium, polyurethane coating
③ PISTON ROD GASKET: special polyurethane
④ GUIDE BUSHING: steel strip with bronze and PTFE insert
⑤ BARREL: drawn anodized calibrated aluminium
⑥ SEMI-PISTON: made of self-lubricating technopolymer with built-in cushioning olives (aluminium with technopolymer pad for Ø 80, 10 and 125)
⑦ PISTON GASKET: NBR
⑧ MAGNET: plastoferrite
⑨ BUFFER + Static O-rings: NBR
⑩ CUSHIONING GASKET: NBR
⑪ NEEDLE: AISI 316
⑫ SCREWS: AISI 316

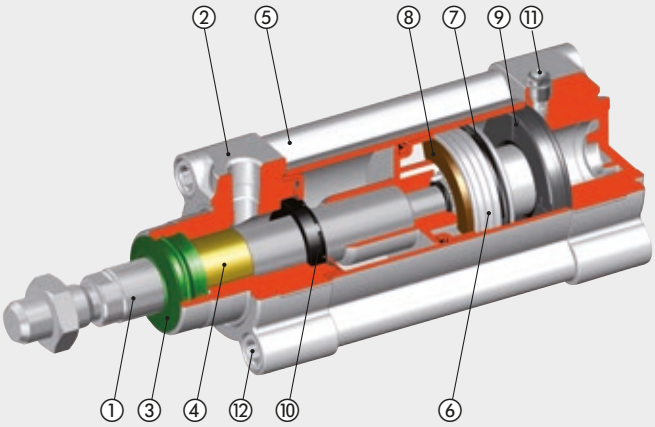

PISTON ROD GASKET FOR HYGIENICALLY-SENSITIVE APPLICATIONS

No fluid stagnation, not even with cylinder in upward direction.
This type of gasket is not available for Ø 125.

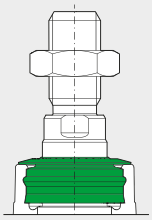

CUSHIONING PINS WITHOUT RECESSES

Anti-ejection pin and bushing made of AISI 316 stainless steel, protruding from the head and with a pass-through screwdriver slot to prevent fluid stagnation.

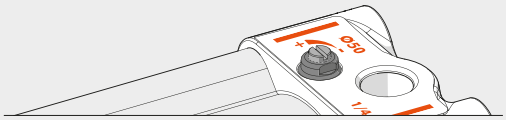

DOUBLE HEAD PROTECTION

POLYURETHANE COATING

ANODISATION

HEAD MADE OF PRESSURE DIE-CAST ALUMINIUM ALLOY

FOOD GRADE GREASE

NSF H1 certified.
Adhesive, waterproof.

DIMENSIONS

STANDARD VERSION

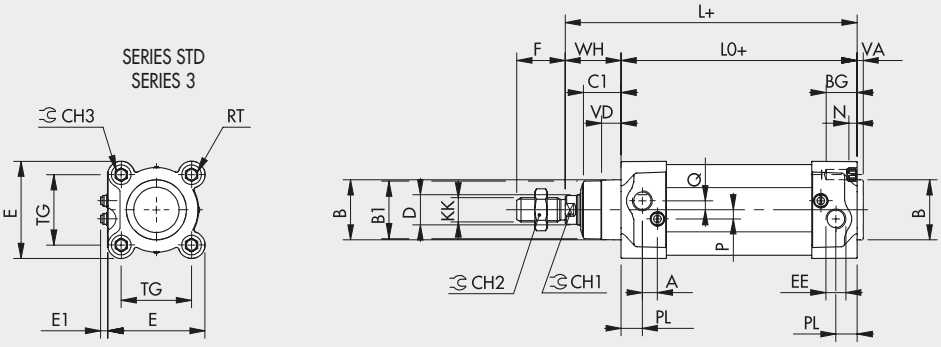

+ = ADD STROKE
++ = ADD TWICE THE STROKE

THROUGH-ROD VERSION

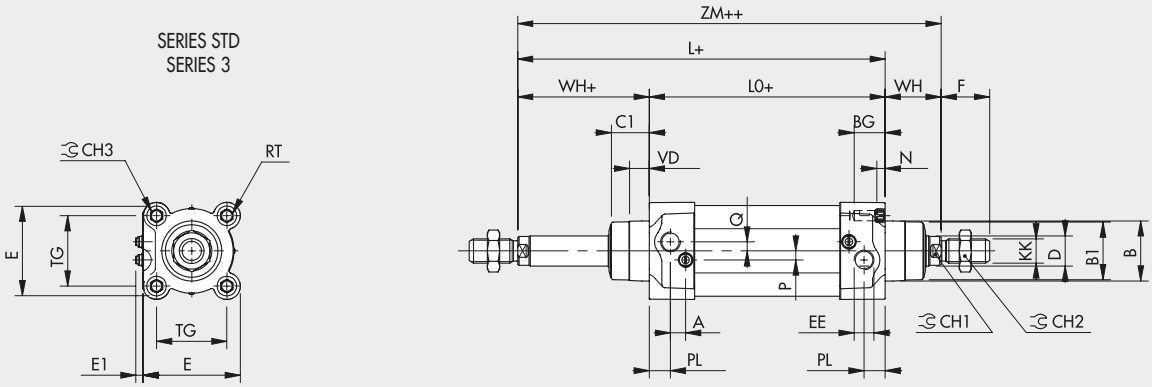

Ø	PL	VD	A	B	B1	WH	C1	CH1	CH2	CH3	KK	D	TG	VA	F	EE	RT	E	E1 min	E1 max	L	L0	ZM	BG	N	P	Q
32	10	6.5	10	30	28	26	16	10	17	6	M10x1.25	12	32.5	4	22	G1/8	M6	46	5.5	8.4	120	94	146	14.5	4.5	6	4
40	12	8	10	35	33	30	20	13	19	6	M12x1.25	16	38	4	24	G1/4	M6	54	4.5	8.4	135	105	165	14.5	4.5	6	4
50	14	13	10	40	38	37	25	17	24	8	M16x1.5	20	46.5	4	32	G1/4	M8	64.5	4.5	8.9	143	106	180	17.5	5.5	6	6
63	16	14	10	45	40	37	25	17	24	8	M16x1.5	20	56.5	4	32	G3/8	M8	75.5	4.1	9.5	158	121	195	17.5	5.5	6	6
80	18	12	12	45	43	46	33	22	30	10	M20x1.5	25	72	4	40	G3/8	M10	94	6.2	12.2	174	128	220	21.5	5.5	10	7
100	20	14	12	55	49	51	38	22	30	10	M20x1.5	25	89	4	40	G1/2	M10	111	6.7	12.2	189	138	240	21.5	5.5	10	7
125	25	20	10	60	54	65	45	27	41	12	M27x2	32	110	6	54	G1/2	M12	135	5.7	12.7	225	160	290	25.5	6.5	12	8

METAL WORK PNEUMATIC

KEY TO CODES

CYL	1 2 1	0	32	0050	B	L
	TYPE		**BORE**	**STROKE**	**MATERIAL**	**GASKETS**
	121 Double-acting, cushioned	**0** Diameter	32	For the maximum suppliable strokes, look at the technical data	**B** AISI 316 rod, technopolymer piston rod: standard for cylinders of Ø32 to Ø63	**L** Piston rod gaskets made of special polyurethane; other gaskets made of NBR
	▲ **122** Through-rod	**S** Standard Non-magnetic	40		**W** AISI 316 rod, aluminium piston rod: standard for all cylinders from Ø80 to 125, Ø32 to 63 with strokes > 999 and Ø32 to125 for through piston rod versions	
	124 Double-acting, non-cushioned	**3** Series 3	50			
		5 Series 3 Non-magnetic	63			
			80			
			■ 100			
			■ 125			

▲ Only available for versions with aluminium piston (W)
■ In the code of cylinder with digit S, 3 or 5 in fourth position bore 100 becomes A1; bore 125 becomes A2

ACCESSORIES: FIXINGS

STAINLESS STEEL SHORT FOOT MOUNTING (AISI 304)

+ = ADD THE STROKE

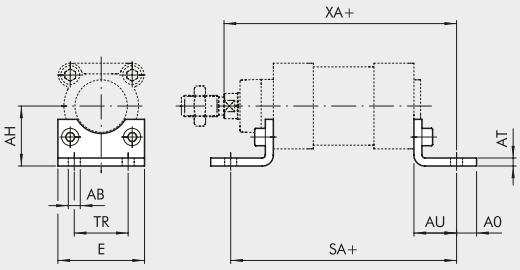

Code	Ø	øAB	AH	AO	AT	AU	TR	E	XA	SA	Weight [g]
W095X322001	32	7	32	11	4	24	32	45	144	142	85
W095X402001	40	9	36	8	4	28	36	52	163	161	95
W095X502001	50	9	45	15	5	32	45	65	175	170	200
W095X632001	63	9	50	13	5	32	50	75	190	185	225
W095X802001	80	12	63	14	6	41	63	95	215	210	435
W095XA12001	100	14	71	16	6	41	75	115	230	220	555
W095XA22001	125	18	90	25	8	45	90	140	270	250	1145

Note: Individually packed with 2 screws

STAINLESS STEEL FEMALE HINGE - MODEL B (AISI 304)

+ = ADD THE STROKE

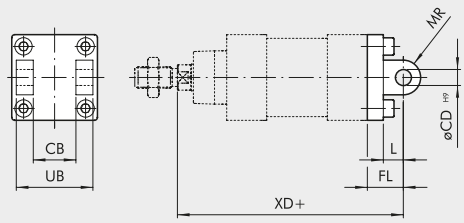

Code	Ø	UB	CB	FL	øCD	XD	MR	L	Weight [g]
W095X322003	32	45	26	22	10	142	10	9	175
W095X402003	40	52	28	25	12	160	12	9	250
W095X502003	50	60	32	27	12	170	12	11	425
W095X632003	63	70	40	32	16	190	16	11	635
W095X802003	80	90	50	36	16	210	16	14	1270
W095XA12003	100	110	60	41	20	230	20	14	2000
W095XA22003	125	130	70	50	25	275	25	20	3715

Note: Supplied with 4 screws, 4 washers. **WITHOUT PIN**.

STAINLESS STEEL FEMALE HINGE PIN (AISI 304)

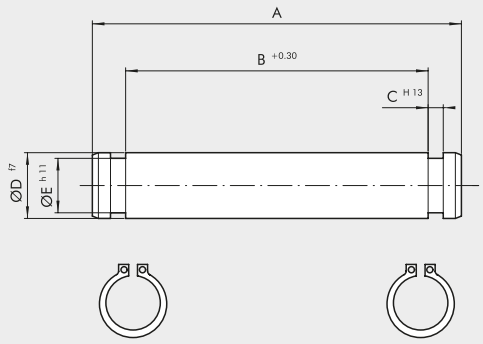

Code	Ø	A	B	C	D	E	Weight [g]
W095X322050	32	53	46	1.1	10	9.6	35
W095X402050	40	60	53	1.1	12	11.5	55
W095X502050	50	68	61	1.1	12	11.5	65
W095X632050	63	78	71	1.1	16	15.2	125
W095X802050	80	98	91	1.1	16	15.2	160
W095XA12050	100	118	111	1.3	20	19	295
W095XA22050	125	139	132	1.3	25	23.9	540

Note: Supplied with 2 snap-rings

STAINLESS STEEL MALE HINGE - MODEL BA (AISI 304)

+ = ADD THE STROKE

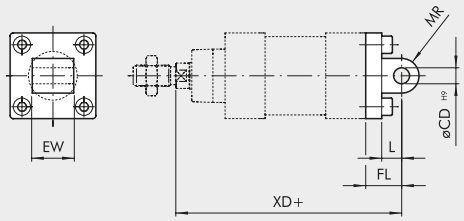

Code	Ø	EW	FL	MR	øCD	L	XD	Weight [g]
W095X322004	32	26	22	10	10	9	142	195
W095X402004	40	28	25	12	12	9	160	265
W095X502004	50	32	27	12	12	11	170	445
W095X632004	63	40	32	16	16	11	190	715
W095X802004	80	50	36	16	16	14	210	1375
W095XA12004	100	60	41	20	20	14	230	2165
W095XA22004	125	70	50	25	25	20	275	3800

Note: Supplied with 4 screws, 4 washers

STAINLESS STEEL ISO COUNTER-HINGE FOR MODEL B - MODEL GL (AISI 304)

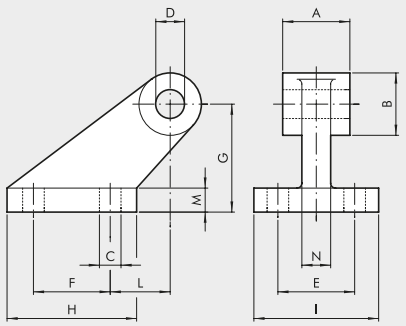

Code	Ø	A	B	C	D	E	F	G	H	I	L	M	N	Weight [g]
W095X322008	32	26	20	6.6	10	38	18	32	31	51	3	8	10	165
W095X402008	40	28	22	6.6	12	41	22	36	35	54	2	10	15	235
W095X502008	50	32	26	9	12	50	30	45	45	65	3	12	16	460
W095X632008	63	40	30	9	16	52	35	50	50	67	2	14	16	590
W095X802008	80	50	30	11	16	66	40	63	60	86	7	14	20	1000
W095XA12008	100	60	38	11	20	76	50	71	70	96	5	17	20	1515
W095XA22008	125	70	45	14	25	94	60	90	90	124	10	20	30	3170

Note: Individually packed

STAINLESS STEEL FRONT FLANGE - MODEL C (AISI 304)

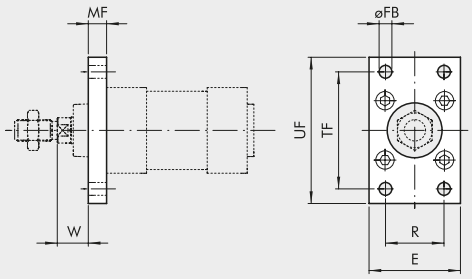

Code	Ø	UF	TF	E	R	MF	øFB	W	Weight [g]
W095X322002	32	80	64	45	32	10	7	16	220
W095X402002	40	90	72	52	36	10	9	20	280
W095X502002	50	110	90	65	45	12	9	25	540
W095X632002	63	120	100	75	50	12	9	25	680
W095X802002	80	150	126	95	63	16	12	30	1550
W095XA12002	100	170	150	115	75	16	14	35	2100
W095XA22002	125	205	180	140	90	20	16	45	3950

Note: Supplied with 4 screws

STAINLESS STEEL REAR FLANGE - MODEL C (AISI 304)

+ = ADD THE STROKE

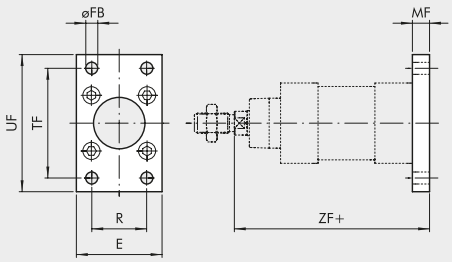

Code	Ø	UF	TF	E	R	MF	øFB	ZF	Weight [g]
W095X322002	32	80	64	45	32	10	7	105	220
W095X402002	40	90	72	52	36	10	9	115	280
W095X502002	50	110	90	65	45	12	9	118	540
W095X632002	63	120	100	75	50	12	9	133	680
W095X802002	80	150	126	95	63	16	12	144	1550
W095XA12002	100	170	150	115	75	16	14	154	2100
W095XA22002	125	205	180	140	90	20	16	245	3950

Note: Supplied with 4 screws

METAL WORK PNEUMATIC

STAINLESS STEEL NUT FOR PISTON RODS (AISI 316)

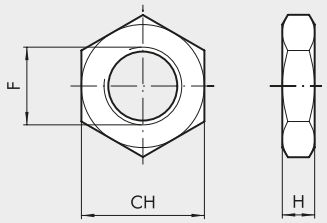

Code	Ø	F	H	CH	Weight [g]
W095X322011	**32**	M10x1.25	6	17	8
W095X402011	**40**	M12x1.25	7	19	11
W095X502011	**50**	M16x1.5	8	24	18
W095X502011	**63**	M16x1.5	8	24	18
W095X802011	**80**	M20x1.5	9	30	31
W095X802011	**100**	M20x1.5	9	30	31
W095XA22011	**125**	M27x2	12	41	81

Note: Individually packed

STAINLESS STEEL FORK-MODEL GK-M (AISI 304)

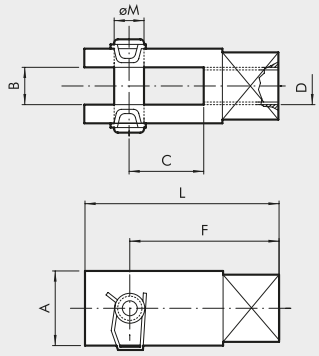

Code	Ø	A	B	C	D	F	L	øM	Weight [g]
W095X322020	**32**	20	10	20	M10x1.25	40	52	10	90
W095X402020	**40**	24	12	24	M12x1.25	48	62	12	145
W095X502020	**50**	32	16	32	M16x1.5	64	83	16	325
W095X502020	**63**	32	16	32	M16x1.5	64	83	16	325
W095X802020	**80**	40	20	40	M20x1.5	80	105	20	680
W095X802020	**100**	40	20	40	M20x1.5	80	105	20	680

Note: Individually packed

ACCESSORIES: MAGNETIC SENSORS

RETRACTABLE SENSOR, SQUARE TYPE (FOR CORROSIVE ENVIRONMENTS)

For codes and technical data, see **chapter A6**.

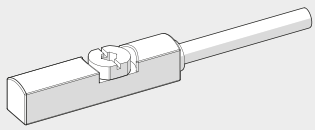

SENSOR BRACKET

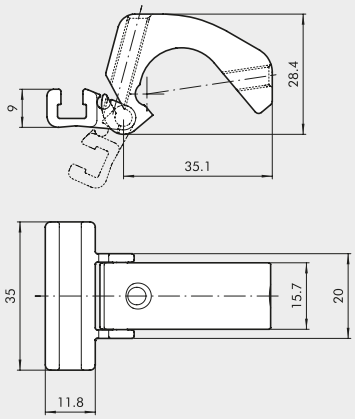

Code	Bore	Description
W0950001100	32 to 125	Sensor bracket

Note: Individually packed

MATERIAL

Bracket: aluminium
Sensor holder: aluminium
Fixing screw: stainless steel