SYNTESI® FILTER-REGULATOR

This device combines in a single unit the functions of filtration, condensate separation and pressure regulation.
It is made up of the same elements forming the filter and the regulator, so the performance and advantages are the same:

- Separation of condensate and larger liquid and solid particles by centrifugation.
- Three condensate drain options (RMSA, RA and SAC).
- 360° visually inspection of the condensate level, via transport spy-holes.
- Rolling diaphragm regulator, allowing maximum precision and flow rate, and minimal friction.
- Compensation for upstream pressure changes.
- Pressure relief valve.
- Quick downstream pressure relief.
- Padlockable push-lock knob.
- Front and rear ports for pressure gauges, pressure switches or, considering the high flow rate, for use as additional filtered and regulated air take-off.

TECHNICAL DATA		FR SY1			FR SY2			
Threaded port		1/8″	1/4″	3/8″	3/8″	1/2″	3/4″	1″
Degree of filtration	µm	5 (yellow) - output air purity class ISO8573-1: 3.7.4						
		20 (white) - output air purity class ISO8573-1: 4.7.4						
		50 (blue) - output air purity class ISO8573-1: 5.7.4						
Max. inlet pressure	bar	15			13			
	MPa	1.5			1.3			
	psi	217			188			
Flow rate at 6.3 bar (0.63 MPa; 91 psi) ΔP 0.5 bar (0.05 MPa; 7 psi)	Nl/min	500	800	2200	3200	4300	5200	
(inlet pressure 10 bar)	scfm	18	28	78	113	152	184	
Flow rate at 6.3 bar (0.63 MPa; 91 psi) ΔP 1 bar (0.1 MPa; 14 psi)	Nl/min	1300	2000	3000	5800	7200	7400	
(inlet pressure 10 bar)	scfm	46	71	106	205	255	262	
Relief valve flow rate at 6.3 bar (0.63 MPa; 91 psi)	Nl/min	70			100			
	scfm	2.5			3.5			
Min/max temperature at 10 bar; 1 MPa; 145 psi	°C	From -10 to +50			From -10 to +50			
Full outflow with zero inlet pressure		Included						
Padlockable knob		Included						
Upstream pressure compensation		Included, via balanced valve						
Weight	g	244	239	230	623	596	592	580
Fluid		Compressed air or other inert gases						
Mounting position		Vertical						
Additional air take-off, for pressure gauges or fittings		1/8″, front and rear			1/4″, front and rear			
Additional air take-off flow rate at 6.3 bar	Nl/min	500			1400			
(0.63 MPa; 91 psi) ΔP 1 bar (0.1 MPa; 14 psi)	scfm	18			50			
Bowl capacity	cm^3	30			70			
Condensate drain		RMSA: drain with manual condensate discharge and automatic discharge at zero pressure						
		RA: automatic drain with condensate discharge, independent of pressure and flow rate.						
		Version conveys the draining by inserting the pipe having internal diameter 6 mm in the lower port.						
		SAC: automatic drain with condensate discharge. **Operates by depression – requires variable air take-offs**.						
		Nota d'uso: **the maximum input pressure for the RA version must not exceed 10 bar**						
Wall fixing screws		No. 2 M4 screws			No. 2 M5 screws			
Notes on use		The pressure must always be set upwards. For increased sensitivity, use a pressure regulator with a rated pressure as close as possible to the required value.						
		On request version without overpressure exaust.						

METAL WORK PNEUMATIC

COMPONENTS

① Technopolymer adjusting knob
② Technopolymer bell
③ Steel adjusting spring (with Geomet® treatment for anti-corrosion version)
④ Technopolymer flange
⑤ Rolling diaphragm
⑥ IN/OUT bushing made of OT58 nickel-plated brass or passivated aluminium for 3/4" - 1"
⑦ Technopolymer body
⑧ OT58 brass valve, with NBR vulcanized gasket
⑨ Clear technopolymer bowl
⑩ Galvanised steel plate for knob locking (stainless steel for anti-corrosion version)
⑪ OT58 brass adjusting screw
⑫ Technopolymer ring nut
⑬ Technopolymer plate
⑭ Technopolymer rod
⑮ Stainless steel valve spring
⑯ O-ring NBR gaskets
⑰ Drain (RMSA)
⑱ Sintered HDPE filter cartridge
⑲ Technopolymer screen

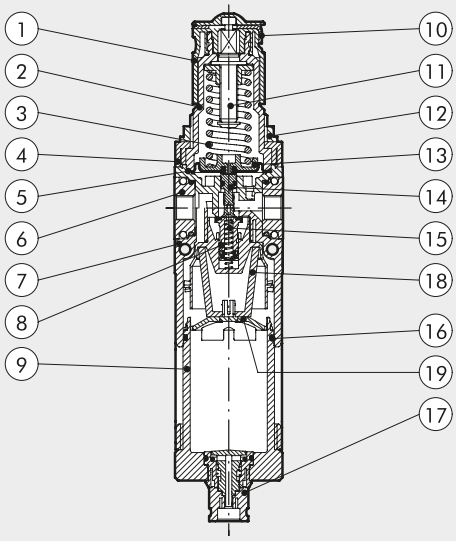

FLOW CHARTS

FR Syntesi® **SY1** 1/8"

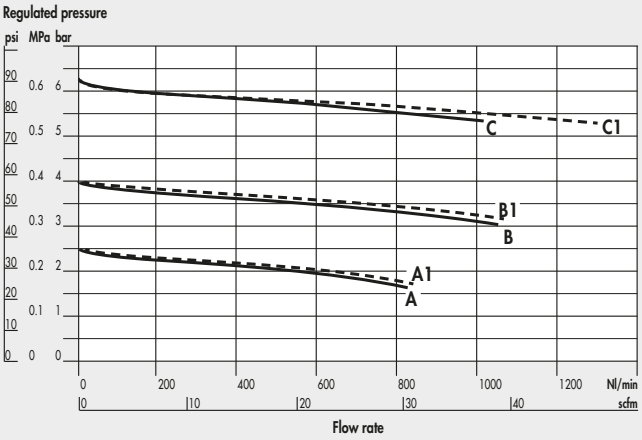

FR Syntesi® **SY1** 1/4"

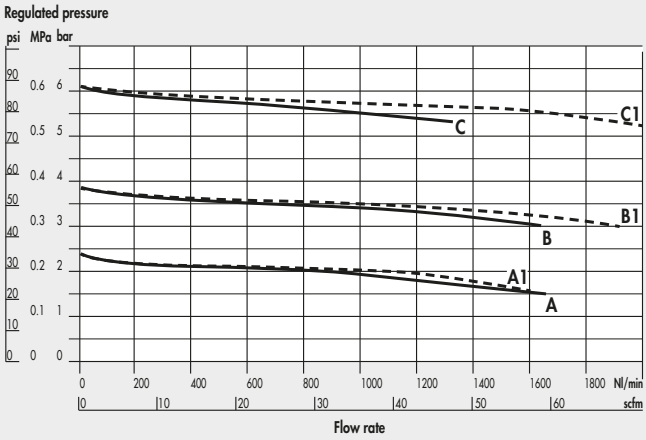

FR Syntesi® **SY1** 3/8"

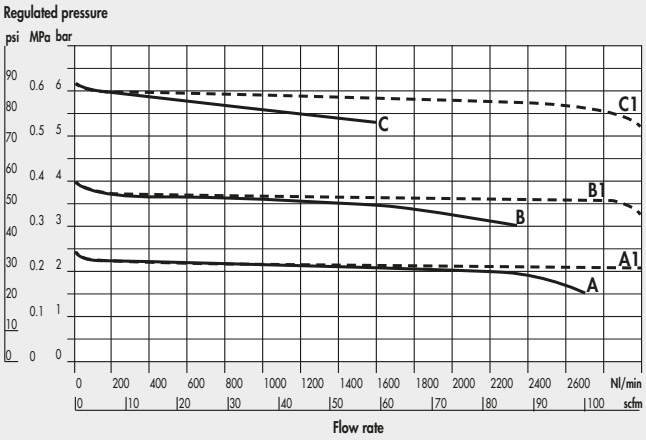

FR Syntesi® **SY2** 3/8"

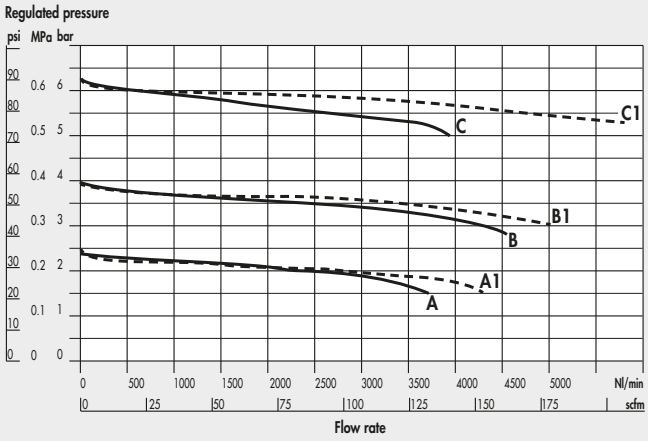

A = P In 7 bar - P Out 2.5 bar
B = P In 7 bar - P Out 4 bar
C = P In 7 bar - P Out 6.3 bar
A1 = P In 10 bar - P Out 2.5 bar
B1 = P In 10 bar - P Out 4 bar
C1 = P In 10 bar - P Out 6.3 bar

FR Syntesi® **SY2** 1/2"

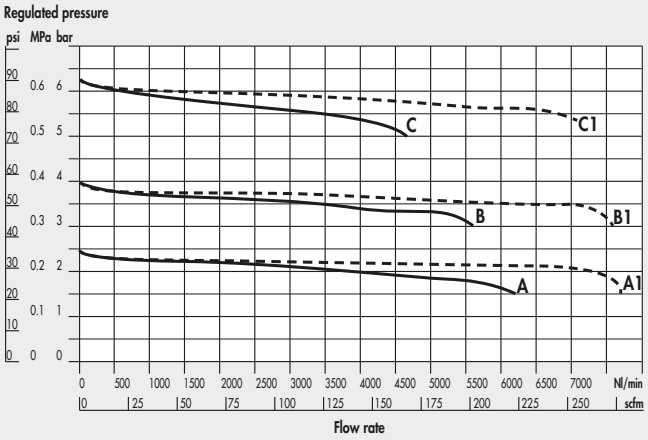

FR Syntesi® **SY2** 3/4" - 1"

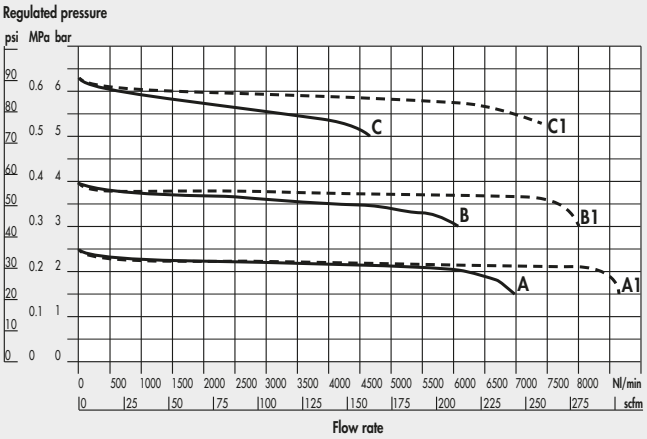

A = P In 7 bar - P Out 2.5 bar
B = P In 7 bar - P Out 4 bar
C = P In 7 bar - P Out 6.3 bar
A1 = P In 10 bar - P Out 2.5 bar
B1 = P In 10 bar - P Out 4 bar
C1 = P In 10 bar - P Out 6.3 bar

DIMENSIONS

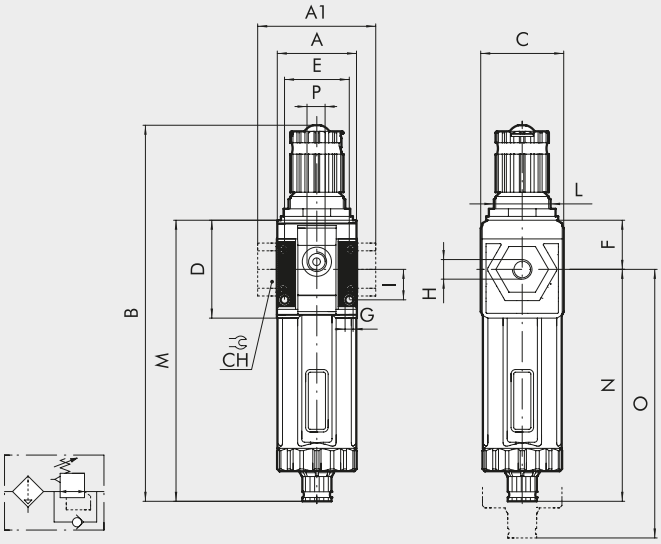

		SIZE 1			SIZE 2			
H (threaded port)		1/8"	1/4"	3/8"	3/8"	1/2"	3/4"	1"
A		42			60.5			
A1		-	-	44	-	-	95	95
B	RMSA	198			246			
	RA/SAC	202			250			
C		44			61			
CH		-			-	-	32	36
D		51.5			70.5			
E		33.5			47.5			
F		25.8			38.2			
G		Hole for M4 screws			Hole for M5 screws			
I		16			22.5			
L		M30x1.5			M38x2			
M	RMSA	148			178			
	RA/SAC	152			182			
N	RMSA	122.2			139.8			
	RA/SAC	126.2			143.8			
O	RMSA	202			245			
	RA/SAC	206			249			
P (pressure gauge port or additional air takes-off)		1/8"			1/4"			

NOTES

METAL WORK PNEUMATIC

KEY TO CODES

56	1	1	B	24	1
SYNTESI	**SIZE**	**THREADED INPUT CONNECTION**	**ELEMENT**	**DEGREE OF FILTRATION, TYPE OF CONDENSATE DRAIN AND SETTING RANGE**	**THREADED OUTPUT CONNECTION**
56 Syntesi **5X** Syntesi anti-corrosion	**1** Size 1	**0** Without bushing **1** 1/8″ port **2** 1/4″ port **3** 3/8″ port	**B** Filter-regulator	● **10** 5 µm, RMSA, 0 to 2 bar ● **20** 20 µm, RMSA, 0 to 2 bar ● **30** 50 µm, RMSA, 0 to 2 bar ● **40** 5 µm, RA, 0 to 2 bar ● **50** 20 µm, RA, 0 to 2 bar ● **60** 50 µm, RA, 0 to 2 bar ● **11** 5 µm, SAC, 0 to 2 bar ● **21** 20 µm, SAC, 0 to 2 bar ● **31** 50 µm, SAC, 0 to 2 bar	**0** Without bushing **1** 1/8″ port **2** 1/4″ port **3** 3/8″ port
	2 Size 2	**0** Without bushing **3** 3/8″ port **4** 1/2″ port **5** 3/4″ port **6** 1″ port		✚ **12** 5 µm, RMSA, 0 to 4 bar ✚ **22** 20 µm, RMSA, 0 to 4 bar ✚ **32** 50 µm, RMSA, 0 to 4 bar ✚ **42** 5 µm, RA, 0 to 4 bar ✚ **52** 20 µm, RA, 0 to 4 bar ✚ **62** 50 µm, RA, 0 to 4 bar ✚ **13** 5 µm, SAC, 0 to 4 bar ✚ **23** 20 µm, SAC, 0 to 4 bar ✚ **33** 50 µm, SAC, 0 to 4 bar **14** 5 µm, RMSA, 0 to 8 bar **24** 20 µm, RMSA, 0 to 8 bar **34** 50 µm, RMSA, 0 to 8 bar **44** 5 µm, RA, 0 to 8 bar **54** 20 µm, RA, 0 to 8 bar **64** 50 µm, RA, 0 to 8 bar **15** 5 µm, SAC, 0 to 8 bar **25** 20 µm, SAC, 0 to 8 bar **35** 50 µm, SAC, 0 to 8 bar **16** 5 µm, RMSA, 0 to 12 bar **26** 20 µm, RMSA, 0 to 12 bar **36** 50 µm, RMSA, 0 to 12 bar **46** 5 µm, RA, 0 to 12 bar **56** 20 µm, RA, 0 to 12 bar **66** 50 µm, RA, 0 to 12 bar **17** 5 µm, SAC, 0 to 12 bar **27** 20 µm, SAC, 0 to 12 bar **37** 50 µm, SAC, 0 to 12 bar	**0** Without bushing **3** 3/8″ port **4** 1/2″ port **5** 3/4″ port **6** 1″ port

● Not available in the anti-corrosion version.
✚ Anti-corrosion version available only in size 1.
RMSA: drain with manual condensate discharge and automatic discharge at zero pressure.
RA: automatic drain with condensate discharge, independent of pressure and flow rate. Version conveys the draining by inserting the pipe having internal diameter 6 mm in the lower port.
SAC: automatic drain with condensate discharge. **Operates by depression – requires variable air take-offs**.

NOTES

PURCHASE ORDER CODES HAVING A MORE FREQUENT USE

N.B. Besides the below mentioned codes, you can order elements composed at your will according to the key to codes.

Code	Description	Code	Description
FILTER-REGULATOR Syntesi® SY1		**FILTER-REGULATOR Syntesi® SY2**	
5610B140	FR SY1 5 08 RMSA without bushings	**5620B140**	FR SY2 5 08 RMSA without bushings
5610B240	FR SY1 20 08 RMSA without bushings	**5620B240**	FR SY2 20 08 RMSA without bushings
5610B440	FR SY1 5 08 RA without bushings	**5620B440**	FR SY2 5 08 RA without bushings
5610B540	FR SY1 20 08 RA without bushings	**5620B540**	FR SY2 20 08 RA without bushings
5610B160	FR SY1 5 012 RMSA without bushings	**5620B160**	FR SY2 5 012 RMSA without bushings
5610B260	FR SY1 20 012 RMSA without bushings	**5620B260**	FR SY2 20 012 RMSA without bushings
5610B460	FR SY1 5 012 RA without bushings	**5620B460**	FR SY2 5 012 RA without bushings
5610B560	FR SY1 20 012 RA without bushings	**5620B560**	FR SY2 20 012 RA without bushings
5611B141	FR SY1 1/8 5 08 RMSA	**5623B143**	FR SY2 3/8 5 08 RMSA
5611B241	FR SY1 1/8 20 08 RMSA	**5623B243**	FR SY2 3/8 20 08 RMSA
5611B441	FR SY1 1/8 5 08 RA	**5623B443**	FR SY2 3/8 5 08 RA
5611B541	FR SY1 1/8 20 08 RA	**5623B543**	FR SY2 3/8 20 08 RA
5611B161	FR SY1 1/8 5 012 RMSA	**5623B163**	FR SY2 3/8 5 012 RMSA
5611B261	FR SY1 1/8 20 012 RMSA	**5623B263**	FR SY2 3/8 20 012 RMSA
5611B461	FR SY1 1/8 5 012 RA	**5623B463**	FR SY2 3/8 5 012 RA
5611B561	FR SY1 1/8 20 012 RA	**5623B563**	FR SY2 3/8 20 012 RA
5612B142	FR SY1 1/4 5 08 RMSA	**5624B144**	FR SY2 1/2 5 08 RMSA
5612B242	FR SY1 1/4 20 08 RMSA	**5624B244**	FR SY2 1/2 20 08 RMSA
5612B442	FR SY1 1/4 5 08 RA	**5624B444**	FR SY2 1/2 5 08 RA
5612B542	FR SY1 1/4 20 08 RA	**5624B544**	FR SY2 1/2 20 08 RA
5612B162	FR SY1 1/4 5 012 RMSA	**5624B164**	FR SY2 1/2 5 012 RMSA
5612B262	FR SY1 1/4 20 012 RMSA	**5624B264**	FR SY2 1/2 20 012 RMSA
5612B462	FR SY1 1/4 5 012 RA	**5624B464**	FR SY2 1/2 5 012 RA
5612B562	FR SY1 1/4 20 012 RA	**5624B564**	FR SY2 1/2 20 012 RA
5613B143	FR SY1 3/8 5 08 RMSA	**5625B145**	FR SY2 3/4 5 08 RMSA
5613B243	FR SY1 3/8 20 08 RMSA	**5625B245**	FR SY2 3/4 20 08 RMSA
5613B443	FR SY1 3/8 5 08 RA	**5625B445**	FR SY2 3/4 5 08 RA
5613B543	FR SY1 3/8 20 08 RA	**5625B545**	FR SY2 3/4 20 08 RA
5613B163	FR SY1 3/8 5 012 RMSA	**5625B165**	FR SY2 3/4 5 012 RMSA
5613B263	FR SY1 3/8 20 012 RMSA	**5625B265**	FR SY2 3/4 20 012 RMSA
5613B463	FR SY1 3/8 5 012 RA	**5625B465**	FR SY2 3/4 5 012 RA
5613B563	FR SY1 3/8 20 012 RA	**5625B565**	FR SY2 3/4 20 012 RA
		5626B146	FR SY2 1 5 08 RMSA
		5626B246	FR SY2 1 20 08 RMSA
		5626B446	FR SY2 1 5 08 RA
		5626B546	FR SY2 1 20 08 RA
		5626B166	FR SY2 1 5 012 RMSA
		5626B266	FR SY2 1 20 012 RMSA
		5626B466	FR SY2 1 5 012 RA
		5626B566	FR SY2 1 20 012 RA

NOTE

Anti-corrosion version

5X_ _ _ _ _ _

Example

5X11B141 FR SY1 1/8 5 08 RMSA anti-corrosion

NOTES