RODLESS CYLINDER WITH "V" GUIDE

METAL WORK PNEUMATIC

Two opposed V-shaped guide units are obtained directly in the anodized aluminium cylinder liner, on which a cover with two acetalic resin wear-resistant pads slides.
The cover has a tip-up-type carriage-piston rod coupling. In this way the carriage only transfers loads axially and does not support loads and moments in other directions.
The play of the pads can be adjusted by means of side threaded grub screws. Therefore, it is possible to recover the wear of pads, which can be replaced without the need for dismantling the cylinder.
This family of rodless cylinders has the same features as the basic versions: such as an integrated adjustable pneumatic cushioning, sensor slots and accessory holding slots.
A version is available with adjustable limit switches and hydraulic decelerators. They can be purchased separately and applied at any time to the basic cylinders as well.

TECHNICAL DATA		NBR	FKM/FPM
Operating pressure	bar	1.5 to 8	
	MPa	0.15 to 0.8	
	psi	21.8 to 116	
Temperature range	°C	−10 to +80	
	°F	14 to 176	
Fluid		50 µm unlubricated filtered air Lubrication, if used, must be continuous	
Bores	mm	Ø 25, 32, 40, 63	
Type of construction		Double-acting rodless cylinder with direct transmission system	
Strokes	mm	Ø 25, 32 and 40: from 100 to 5700 with 1 mm interval	
		Ø 63: from 100 to 5500 with 1mm interval	
Recommended speeds	m/s	<1	≥1
Max. speed with decelerators	m/s	<1	2
Weight		See cylinder "**General technical data**" at the beginning of the chapter	
Notes		**For speeds lower than 0.2 m/s to prevent surging, use the version No stick-slip and non-lubricated air**	

COMPONENTS

① CYLINDER HEAD: aluminium alloy
② BARREL: profiled anodized aluminium alloy
③ PISTON GASKET: NBR or FKM/FPM
④ CENTRAL ELEMENT: aluminium alloy
⑤ SCRAPER: Hostaform®
⑥ O-RING: FKM/FPM
⑦ PISTON: Hostaform®
⑧ CUSHIONING CONE: aluminium alloy
⑨ STATIC O-RINGS: NBR or FKM/FPM
⑩ SLIDE: aluminium alloy
⑪ OUTER STRIP: stainless steel
⑫ INNER STRIP: stainless steel
⑬ BAND SUPPORT: Hostaform®
⑭ "V" GUIDE PLATE: Hostaform®

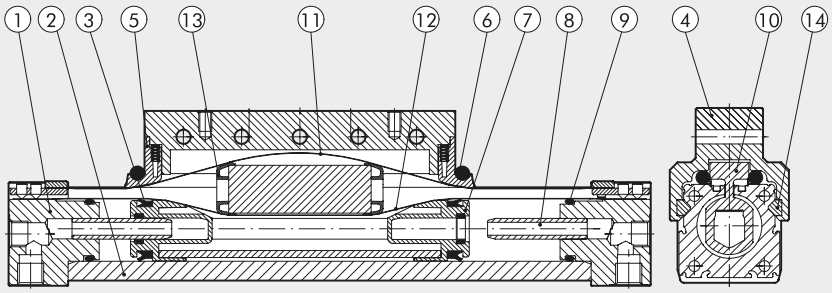

DIMENSIONING - FORCE AND TORQUE

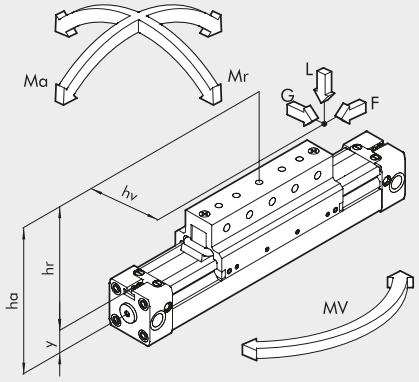

Bore	Centre Distance Y	Actual Force F at 6 bar [N]	Cushioning stroke [mm]	Max. load L [N]	Ma max [Nm]	Mr max [Nm]	Mv max [Nm]
25	14	200	21	350	22	5	22
32	18	300	26	400	40	10	40
40	22	490	32	700	70	26	70
63	44	1300	40	1800	250	80	250

N.B.: The loads can be applied for speeds below 0.2 m/s. For higher speeds, it is advisable not to exceed 1 m/s
N.B.: When the cylinder is subjected simultaneously to torque and force, keep to the following equations, where the lengths have to be given in metres.

$Ma = F \times ha \qquad Mr = L \times hv + G \times hr \qquad Mv = F \times hv$

$$\frac{Mv}{Mv_{max}} \leq 1; \qquad \frac{L}{L_{max}} \leq 1; \qquad \frac{Ma}{Ma_{max}} + \frac{Mr}{Mr_{max}} + 0.22 \times \frac{Mv}{Mv_{max}} + 0.4 \frac{L}{L_{max}} \leq 1$$

DIAGRAM OF SPEED AND MAXIMUM CUSHIONABLE LOAD

For the cylinder to reach the end-of-stroke position without intense or repeated impact which would damage it, it is necessary to annul the kinetic energy of the moving mass and the work generated. The maximum cushionable load depends on the traversing speed and the absorption of the air buffer supplied standard with the various cylinders. The diagram shows the speeds and cushionable mass for the various diameters at a pressure of 6 bar.

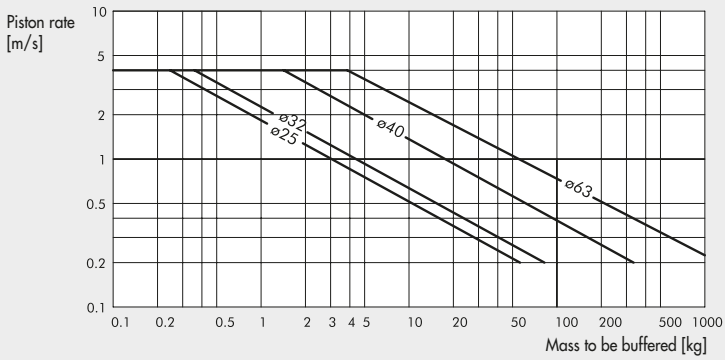

MAXIMUM LOAD ACCORDING TO THE DISTANCE BETWEEN SUPPORTS

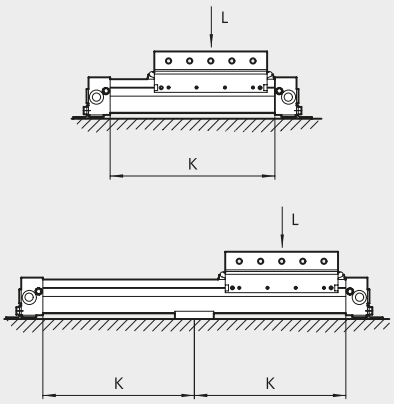

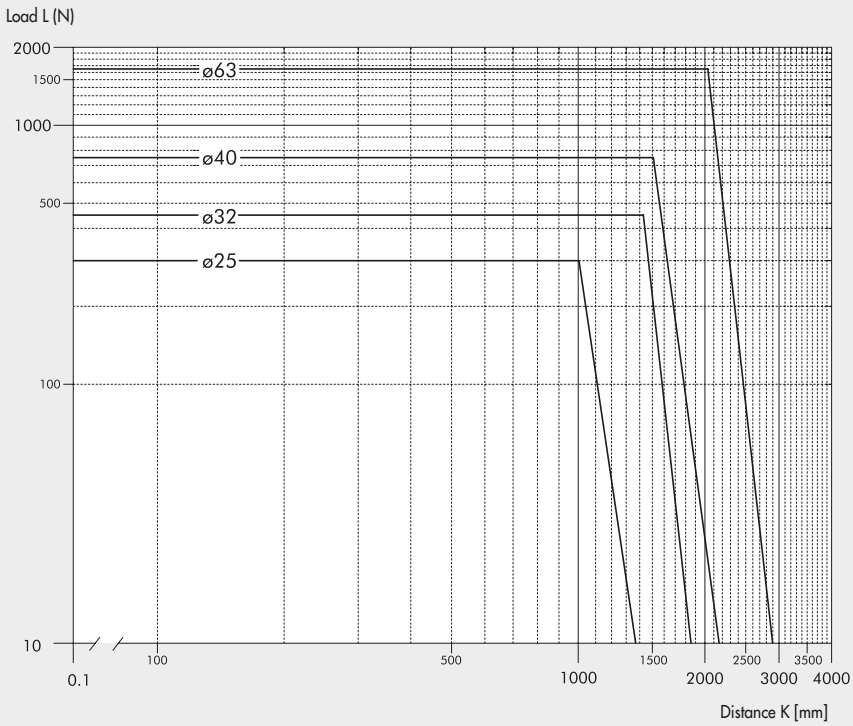

METAL WORK PNEUMATIC

BARREL CROSS SECTION

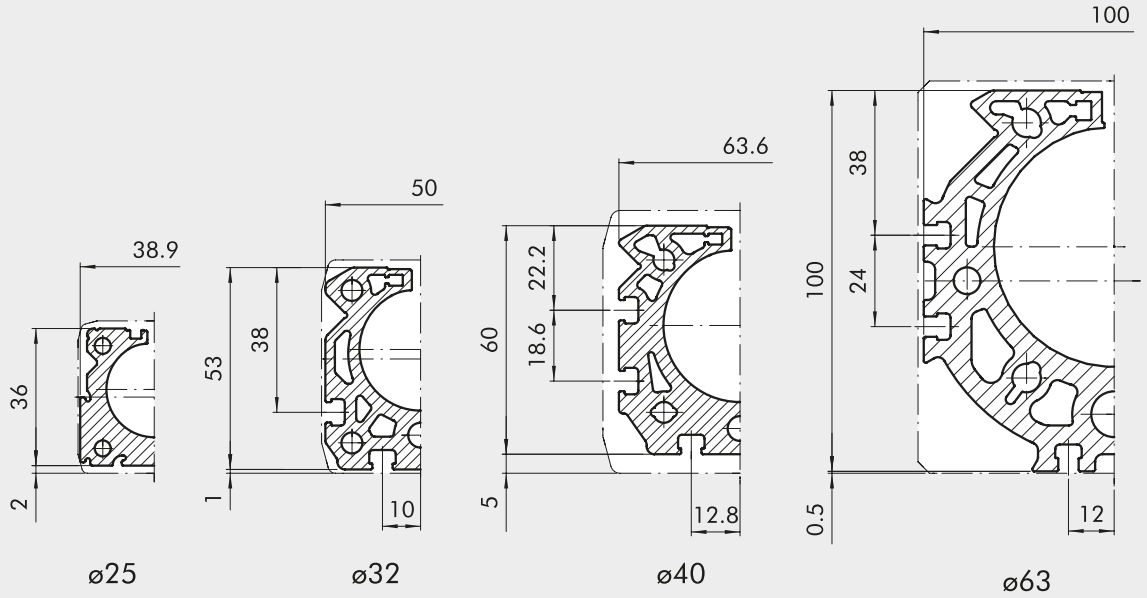

DIMENSIONS Ø 25 to 40

+ = ADDED STROKE

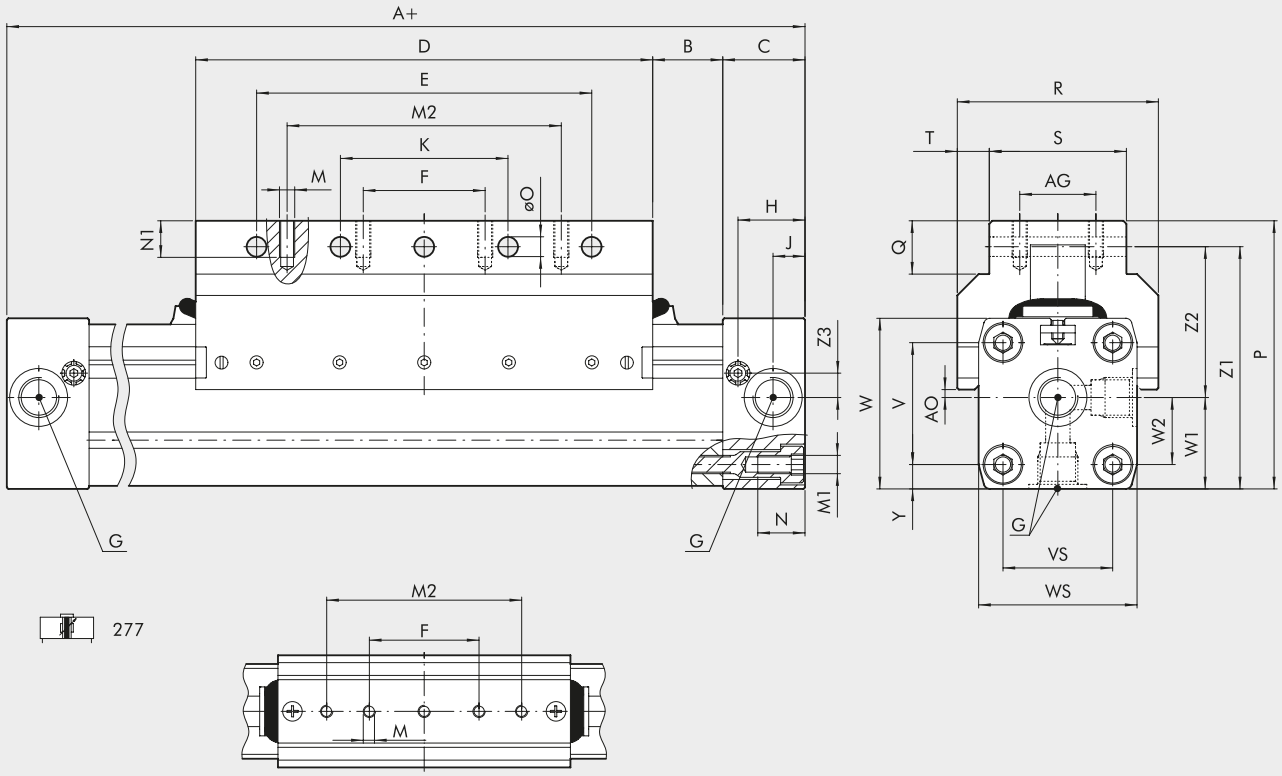

Only for Ø 25

Ø	A	AG	AO	B	C	D	E	F	G	H	J	K	M	M1	M2	N	N1	øO	P	Q	R	S	T	V	VS	W	WS	W1	W2	Y	Z1	Z2	Z3
25	200	-	2	17	23	120	90	45	1/8	18.5	8.5	45	M5	M5	80	12	8	5.5	67.5	21	46	26	10	27	27	40	40	20	13.5	6.5	57.5	37.5	6.5
32	250	25	2.6	23	27	150	110	40	1/4	22	10.5	55	M5	M6	90	15	12	6.4	88	17.5	66	45	10.5	40	36	56	52	30	22	8	79.5	49.5	8
40	300	25	9.4	45	30	150	110	40	1/4	24	15	55	M6	M6	90	17.5	12	6.4	98.5	17.5	80	45	17.5	54	54	69	72	36	27	9	89.9	53.9	11.8

DIMENSIONS Ø 63

+ = ADDED STROKE

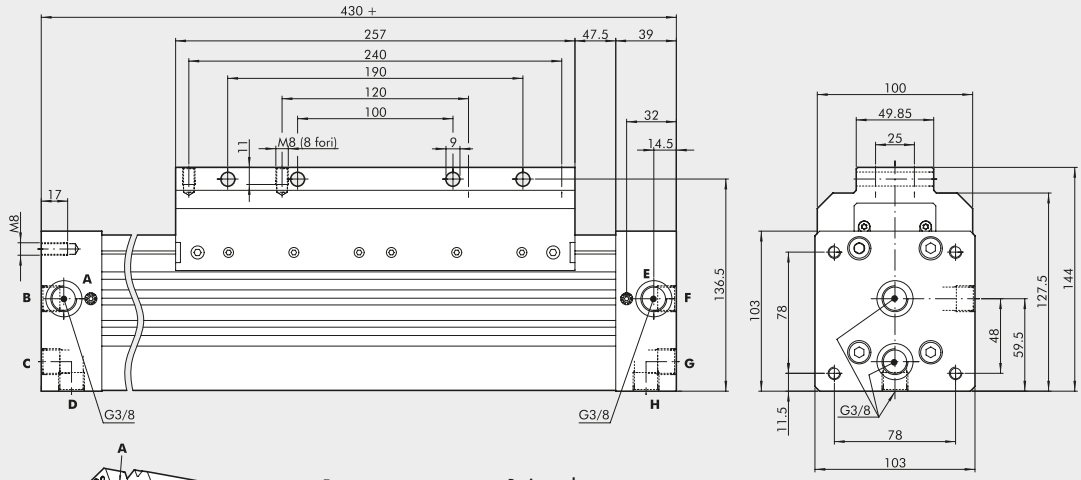

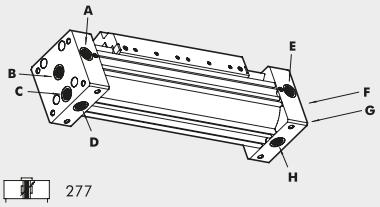

277

Basic supply
A, B, C, D to feed to left chambers
E, F, G, H to feed the right chambers
Note: B, C, D, F, G and H are supplied closed with threaded plugs

If you modify the position of an inner plug following the instructions provided with the cylinder, you can arrange:

all feeds from the left	**all feeds from the right**
A, B feed the left chambers	E, F feed the right chambers
C, D feed the right chambers	G, H feed the left chambers

DIMENSIONS VERSION WITH ADJUSTABLE LIMIT SWITCH AND SHOCK ABSORBERS

Ø 25

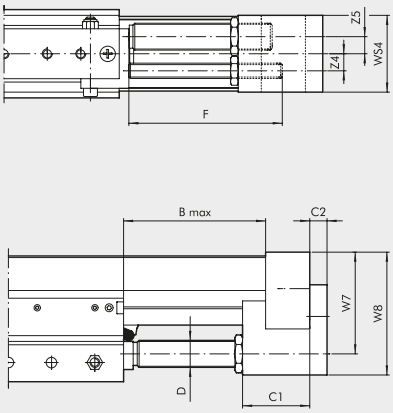

Ø 32; Ø 40

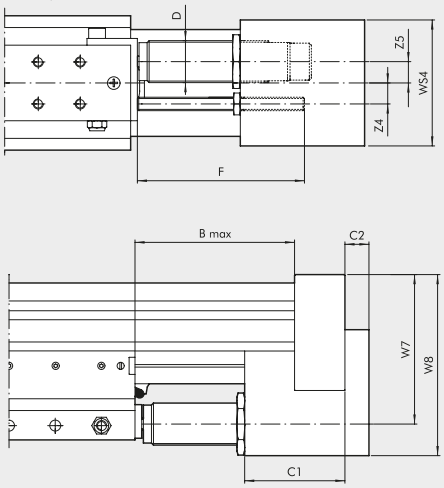

Ø 63

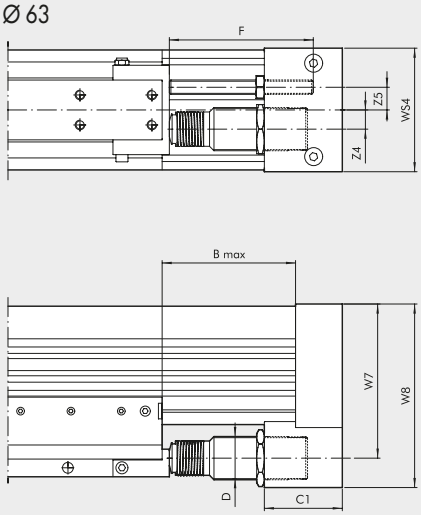

278

Ø	B Max	C1	C2	D	F	W7	W8	WS4	Z4	Z5	Stroke	Max. cushioned force For stroke [J]	Max. cushioned force For hour [J]	Max. impact force [N]	Max. thrust force [N]
25	84	35	9	M14x1.5	80	53	67	50	8	9.8	16	26	34000	2800	530
32	110	45	11	M20x1.5	100	74	89	60	10	12.2	22	54	53700	3750	890
40	120	60	14	M25x1.5	100	89	108	75	12.5	12.7	25	90	70000	5500	1550
63	122	65	-	M36x1.5	120	128.5	153	103	16	19	25	160	91000	11120	2220

For graphs to help choose shock absorbers see page **A1**.157

KEY TO CODES

CYL	2 7	7	0	2 5	0 1 5 0	C	N
	TYPE			**BORE**	**STROKE**		**GASKETS**
	27 Rodless cylinder	**7** Double-acting cushioned Magnetic with "V" guide **8** Double-acting cushioned Magnetic with "V" guide + adjustable limit switches and decelerator	**0** Magnetic **S** Non-magnetic ∗ **G** No stick-slip	25 32 40 63	Ø 25 to 40: from 100 to 5700 mm Ø 63 from 100 to 5500 mm		**N** NBR gasket ● **V** FKM/FPM gasket

∗ For speeds lower than 0.2 m/s, to prevent surging. Use no-lubricated air only ● For speed ≥ 1/m/s