RODLESS CYLINDER SERIES STD

Rodless cylinders come in five different bores - Ø 16, 25, 32, 40 and 63 mm – and the design incorporates numerous innovations.

- Calibrated extruded anodized aluminium alloy barrel
- Sensor slots and accessory slots in the barrel itself
- Longitudinal seal by means of specially-shaped indeformable stainless steel strips
- Strokes 100 to 5700 mm with 1mm intervals
- Adjustable integrated pneumatic cushioning
- Adjustable limit switches and decelerations can be applied at any time
- For this type of cylinder (size 32 and upwards), the valves can be fitted directly using the retracting sensors without requiring any intermediate brackets. Refer to the table on page **A1**.54

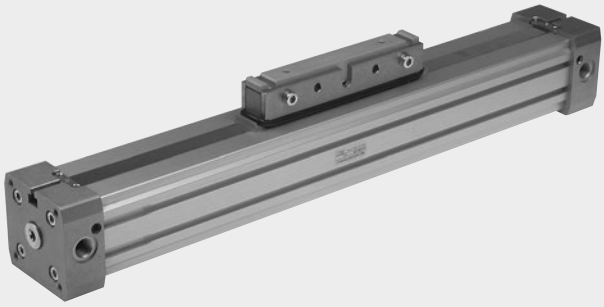

TECHNICAL DATA		NBR	FKM/FPM
Operating pressure	bar	1 to 8	
	MPa	0.1 to 0.8	
	psi	14.5 to 116	
Temperature range	°C	–10 to +80	
	°F	14 to 176	
Fluid		50 µm unlubricated filtered air Lubrication, if used, must be continuous	
Bores	mm	Ø 16, 25, 32, 40, 63	
Type of construction		Double-acting rodless cylinder with direct transmission system	
Strokes	mm	Ø 16: from 100 to 5000 with 1mm interval	
		Ø 25, 32 e 40: from 100 to 5700 with 1mm interval	
		Ø 63: from 100 to 5500 with 1mm interval	
Recommended speeds	m/s	<1	≥1
Max. speed with decelerators	m/s	<1	2
Weight		See cylinder "**General technical data**" at the beginning of the chapter	
Notes		**For speeds lower than 0.2 m/s to prevent surging, use the version No stick-slip and non-lubricated air**	

COMPONENTS

① CYLINDER HEAD: aluminium alloy
② BARREL: profiled anodized aluminium alloy
③ PISTON GASKET: NBR or FKM/FPM
④ CENTRAL ELEMENT: aluminium alloy
⑤ SCRAPER: Hostaform®
⑥ O-RING: FKM/FPM
⑦ PISTON: Hostaform®
⑧ CUSHIONING CONE: aluminium alloy
⑨ STATIC O-RINGS: NBR or FKM/FPM
⑩ SLIDE: aluminium alloy
⑪ OUTER STRIP: stainless steel
⑫ INNER STRIP: stainless steel
⑬ BAND SUPPORT: Hostaform®

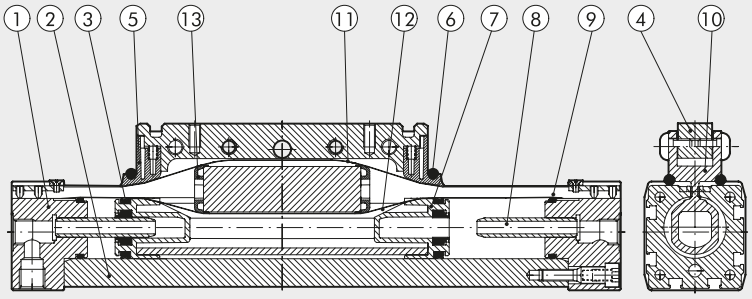

METAL WORK PNEUMATIC

DIMENSIONING - FORCE AND TORQUE

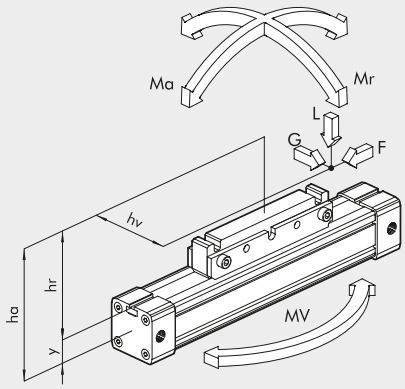

Bore	Centre Distance Y	Actual Force F at 6 bar [N]	Cushioning stroke [mm]	Max. load L [N]	Ma max [Nm]	Mr max [Nm]	Mv max [Nm]
16	9	110	15	120	4	0.3	0.5
25	14	250	21	300	15	1	3
32	18	420	26	450	30	2	4
40	22	640	32	750	60	4	8
63	44	1550	40	1650	200	8	24

N.B.: When the cylinder is subjected simultaneously to torque and force, keep to the following equations, where the lengths have to be given in metres.

$Ma = F \times ha \qquad Mr = L \times hv + G \times hr \qquad Mv = F \times hv$

$$\frac{Mv}{Mv_{max}} \leq 1; \quad \frac{L}{L_{max}} \leq 1; \quad \frac{Ma}{Ma_{max}} + \frac{Mr}{Mr_{max}} + 0.22 \times \frac{Mv}{Mv_{max}} + 0.4 \frac{L}{L_{max}} \leq 1$$

DIAGRAM OF SPEED AND MAXIMUM CUSHIONABLE LOAD

For the cylinder to reach the end-of-stroke position without intense or repeated impact which would damage it, it is necessary to annul the kinetic energy of the moving mass and the work generated. The maximum cushionable load depends on the traversing speed and the absorption of the air buffer supplied standard with the various cylinders.
The diagram shows the speeds and cushionable mass for the various diameters at a pressure of 6 bar.

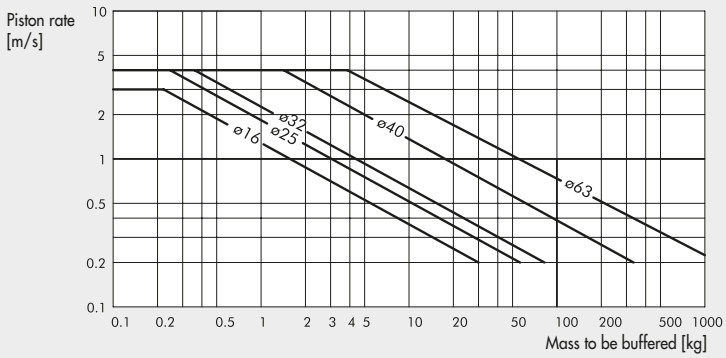

MAXIMUM LOAD ACCORDING TO THE DISTANCE BETWEEN SUPPORTS

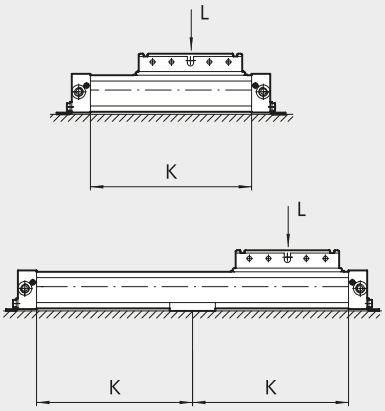

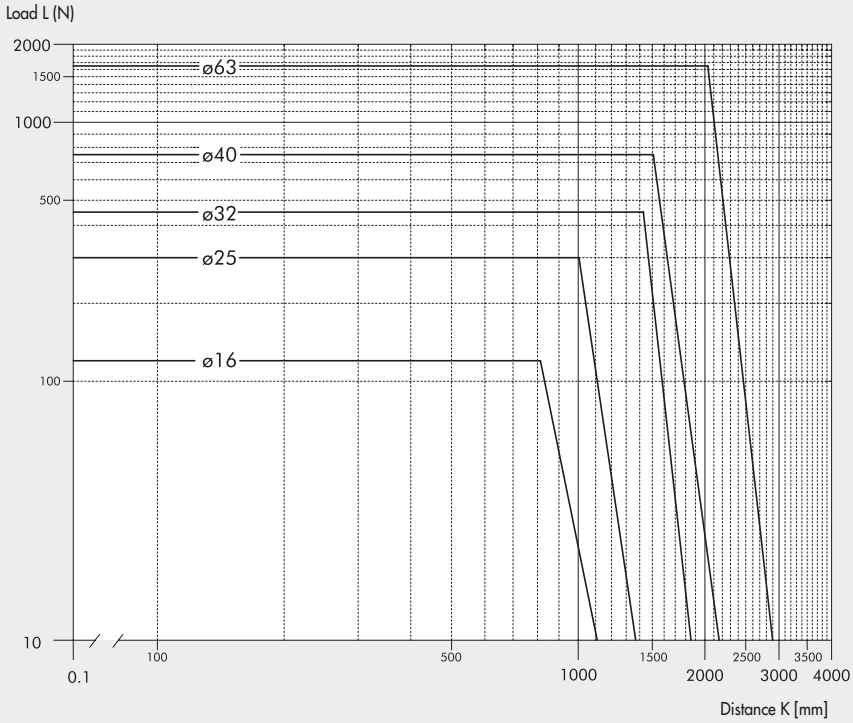

BARREL CROSS SECTION

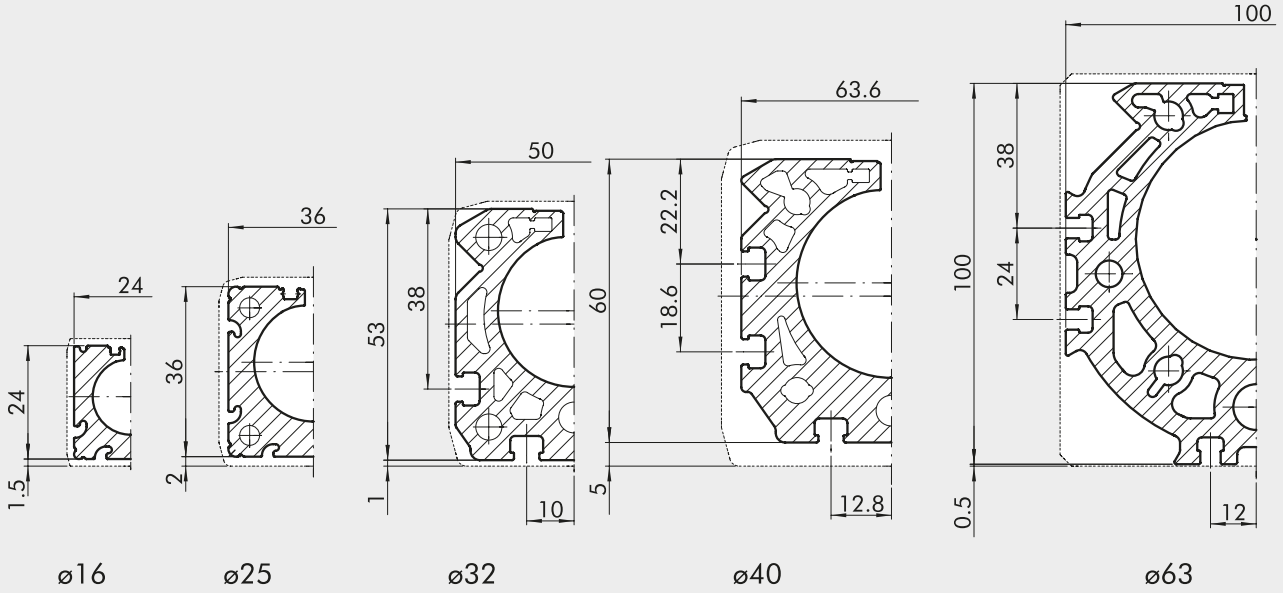

DIMENSIONS Ø 16 to 40

+ = ADDED STROKE

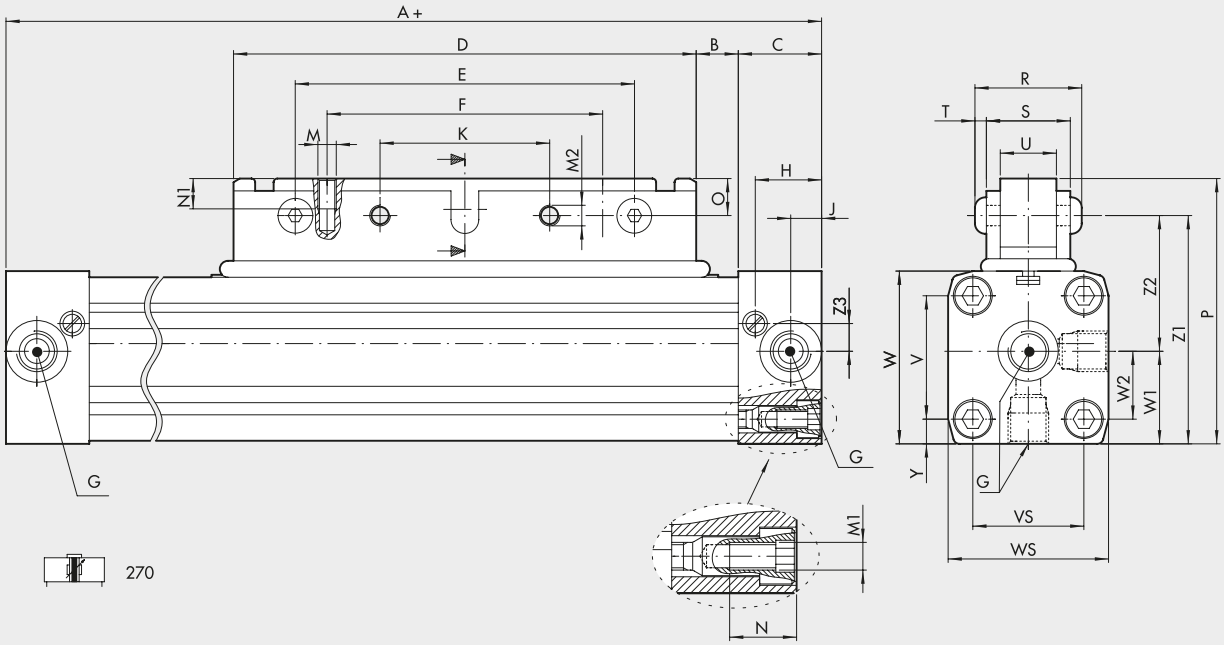

Ø	A	B	C	D	E	F	G	H	J	K	M	M1	M2	N	N1	O	P	R	S	T	U	V	VS	W	WS	W1	W2	Y	Z1	Z2	Z3	Z4
16	130	12	15	76	64	48	M5	12	6.4	32	M4	M3	M5	7	8	6	43.5	23.5	18	2.75	10	18	18	27	27	13.5	9	4.5	37.5	24	4.5	28
25	200	17	23	120	100	80	1/8	18.5	8.5	50	M5	M5	M6	12	11	13	66	29.6	23	3.3	15	27	27	40	40	20	13.5	6.5	53	33	6.5	42
32	250	23	27	150	110	90	1/4	22	10.5	55	M6	M6	M8	14	12	12	86	36	27	4.4	18	40	36	56	52	30	22	8	74	44	8	70
40	300	45	30	150	110	90	1/4	24	15	55	M6	M6	M8	17.5	12	12	97	36.8	28	4.4	18	54	54	69	72	36	27	9	85	49	11.8	70

METAL WORK PNEUMATIC

DIMENSIONS Ø 63

+ = ADDED STROKE

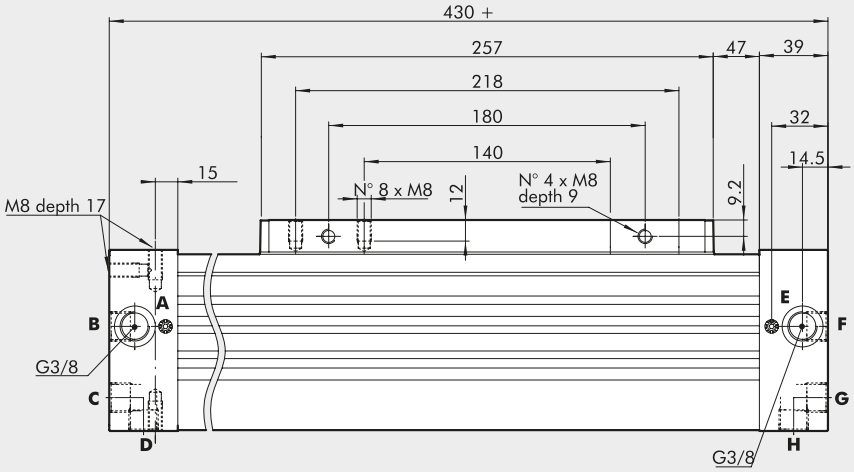

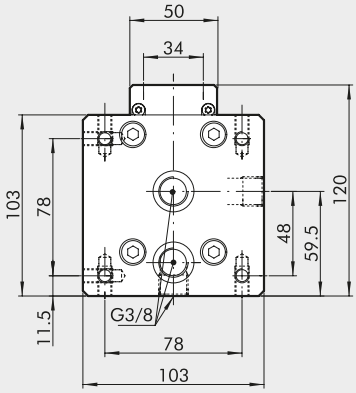

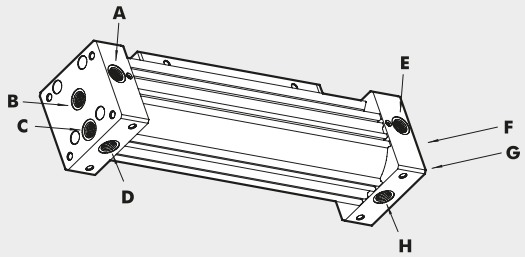

Basic supply
A, B, C, D to feed to left chambers
E, F, G, H to feed the right chambers
Note: B, C, D, F, G and H are supplied closed with threaded plugs

If you modify the position of an inner plug following the instructions provided with the cylinder, you can arrange:

all feeds from the left	**all feeds from the right**
A, B feed the left chambers	E, F feed the right chambers
C, D feed the right chambers	G, H feed the left chambers

VERSION WITH SWING CARRIAGE

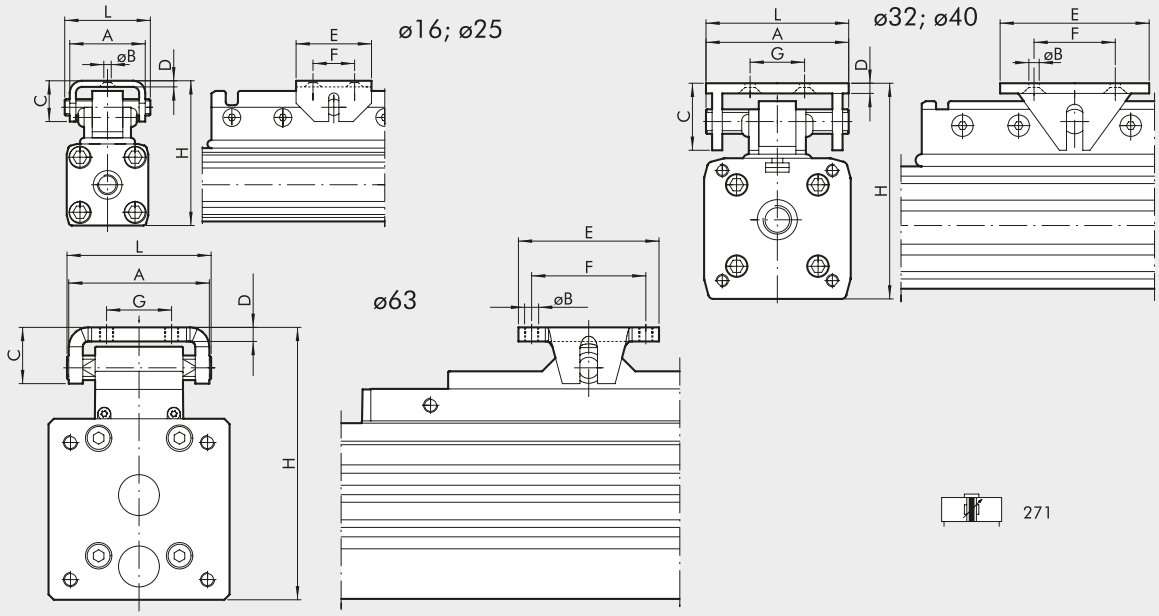

NOTE: For other dimensions see code 270

Ø	A	ØB	C	D	E	F	G	H	L
16	25	4.5	13	2	20	10	–	47-50	28
25	37	5.5	20	3	30	16	–	72-75	42
32	70	6.5	38	5	90	75	55	91-100	70
40	70	6.5	38	5	90	75	55	111-120	70
63	80	M8	32	8	80	65	37	155-162	82

DIMENSIONS VERSION WITH ADJUSTABLE LIMIT SWITCH AND SHOCK ABSORBERS

ø16

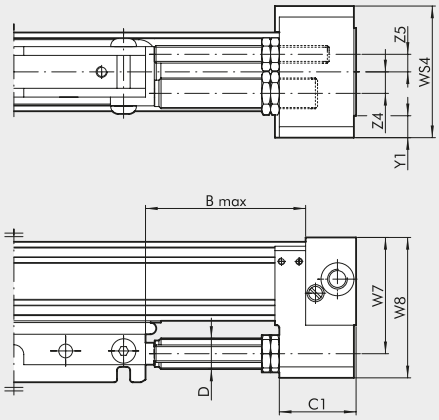

ø25÷ø40

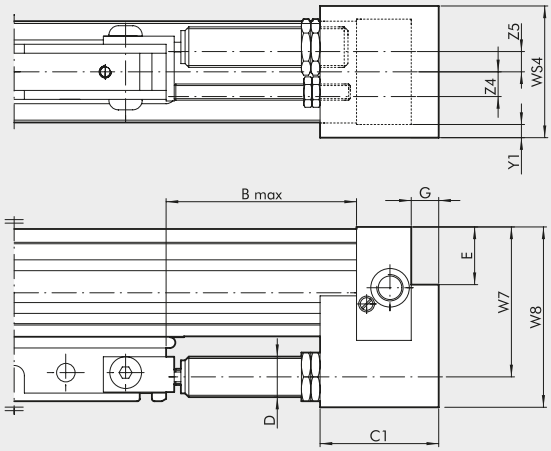

ø63

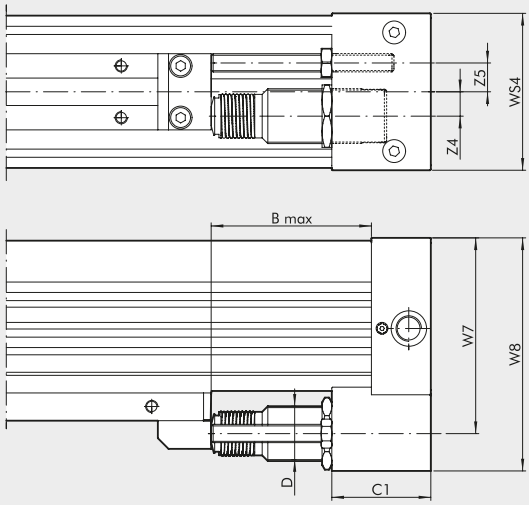

273

Ø	B Max	C1	D	E	G	W7	W8	WS4	Y1	Z4	Z5	Stroke	Max. cushioned force For stroke [J]	Max. cushioned force For hour [J]	Max. impact force [N]	Max. thrust force [N]
16	42	22	M12x1	–	–	38	46	42	7.5	7	7.5	10.4	10	14125	1000	220
25	72	44	M14x1.5	17	9	53	67	50	5	8	9.8	16	26	34000	2800	530
32	90	56	M20x1.5	29	11	74	89	60	4	10	12.2	22	54	53700	3750	890
40	105	74	M25x1.5	32.8	14	89	108	75	1.5	12.5	12.7	25	90	70000	5500	1550
63	105	65	M36x1.5	–	–	128.5	153	103	–	16	19	25	160	91000	11120	2220

For graphs to help choose shock absorbers see page **A1**.157

KEY TO CODES

CYL	2 7	0	0	2 5	0 1 5 0	C	N
	TYPE			**BORE**	**STROKE**		**GASKETS**
	27 Rodless cylinder	**0** Double-acting cushioned magnetic **1** Double-acting with swing carriage ✚ **2** Twin cushioned series "Double" **3** Double-acting Magnetic + adjustable limit switches and shock absorbers	**0** Magnetic **S** Non-magnetic ■ **G** No stick-slip	16 25 32 40 63	Ø 16: from 100 to 5000 mm Ø 25 to 40: from 100 to 5700 mm Ø 63 from 100 to 5500 mm		**N** NBR gasket ● **V** FKM/FPM gasket

■ **For speeds lower than 0.2 m/s, to prevent surging. Use no-lubricated air only** ● For speed ≥ 1/m/s ✚ Available up to Ø 32

RODLESS CYLINDER WITH "V" GUIDE

METAL WORK PNEUMATIC

Two opposed V-shaped guide units are obtained directly in the anodized aluminium cylinder liner, on which a cover with two acetalic resin wear-resistant pads slides.
The cover has a tip-up-type carriage-piston rod coupling. In this way the carriage only transfers loads axially and does not support loads and moments in other directions.
The play of the pads can be adjusted by means of side threaded grub screws. Therefore, it is possible to recover the wear of pads, which can be replaced without the need for dismantling the cylinder.
This family of rodless cylinders has the same features as the basic versions: such as an integrated adjustable pneumatic cushioning, sensor slots and accessory holding slots.
A version is available with adjustable limit switches and hydraulic decelerators. They can be purchased separately and applied at any time to the basic cylinders as well.

TECHNICAL DATA		NBR	FKM/FPM
Operating pressure	bar	1.5 to 8	
	MPa	0.15 to 0.8	
	psi	21.8 to 116	
Temperature range	°C	−10 to +80	
	°F	14 to 176	
Fluid		50 µm unlubricated filtered air Lubrication, if used, must be continuous	
Bores	mm	Ø 25, 32, 40, 63	
Type of construction		Double-acting rodless cylinder with direct transmission system	
Strokes	mm	Ø 25, 32 and 40: from 100 to 5700 with 1 mm interval	
		Ø 63: from 100 to 5500 with 1mm interval	
Recommended speeds	m/s	<1	≥1
Max. speed with decelerators	m/s	<1	2
Weight		See cylinder "**General technical data**" at the beginning of the chapter	
Notes		**For speeds lower than 0.2 m/s to prevent surging, use the version No stick-slip and non-lubricated air**	

COMPONENTS
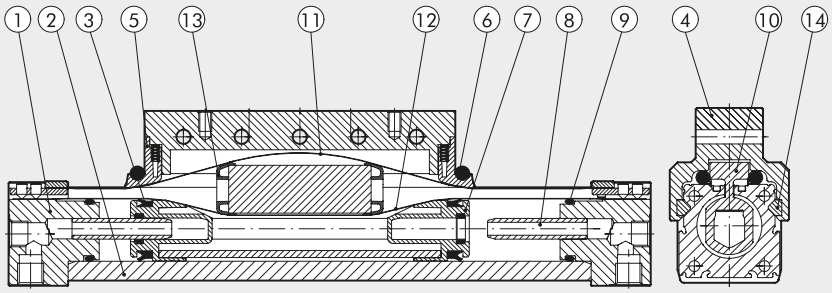
① CYLINDER HEAD: aluminium alloy
② BARREL: profiled anodized aluminium alloy
③ PISTON GASKET: NBR or FKM/FPM
④ CENTRAL ELEMENT: aluminium alloy
⑤ SCRAPER: Hostaform®
⑥ O-RING: FKM/FPM
⑦ PISTON: Hostaform®
⑧ CUSHIONING CONE: aluminium alloy
⑨ STATIC O-RINGS: NBR or FKM/FPM
⑩ SLIDE: aluminium alloy
⑪ OUTER STRIP: stainless steel
⑫ INNER STRIP: stainless steel
⑬ BAND SUPPORT: Hostaform®
⑭ "V" GUIDE PLATE: Hostaform®