STAINLESS STEEL ISO 6432 MINI-CYLINDER

ISO 6432 stainless steel micro-cylinders are available in various versions with a wide range of accessories

- with or without magnet execution
- double-acting - single or through-rod
- gaskets: Polyurethane or FKM/FPM (for high temperatures)
- fixing accessories

TECHNICAL DATA		POLYURETHANE	FKM/FPM
Max operating pressure	bar	10	
	MPa	1	
Temperature range	°C	−10 to +80	−10 to +150 (non-magnetic cylinders)
Fluid		Unlubricated air. Lubrication, if used, must be continuous	
Bores	mm	16; 20; 25	
Design		Chamfered heads	
Standard strokes ✚	mm	max 500	
Versions		Double-acting, Double-acting through-rod	
Magnet for sensors		All versions come complete with magnet. Supplied without magnet on request	
Weight		See cylinder "**General technical data**" at the beginning of the chapter	
Notes		✚ Maximum recommended strokes. Higher values can create operating problems	

COMPONENTS

① PISTON ROD: AISI 316 steel
② HEAD: AISI 304 steel
③ PISTON ROD GASKET: polyurethane or FKM/FPM
④ GUIDE BUSHING: sintered bronze
⑤ BARREL: AISI 304 steel
⑥ PISTON: brass
⑦ PISTON GASKET: polyurethane or FKM/FPM
⑧ MAGNET: plastoferrite
⑨ Static O-rings: NBR or FKM/FPM

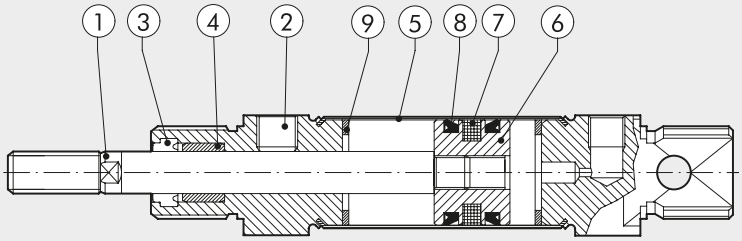

DIMENSIONS OF DOUBLE-ACTING

+ = ADD STROKE

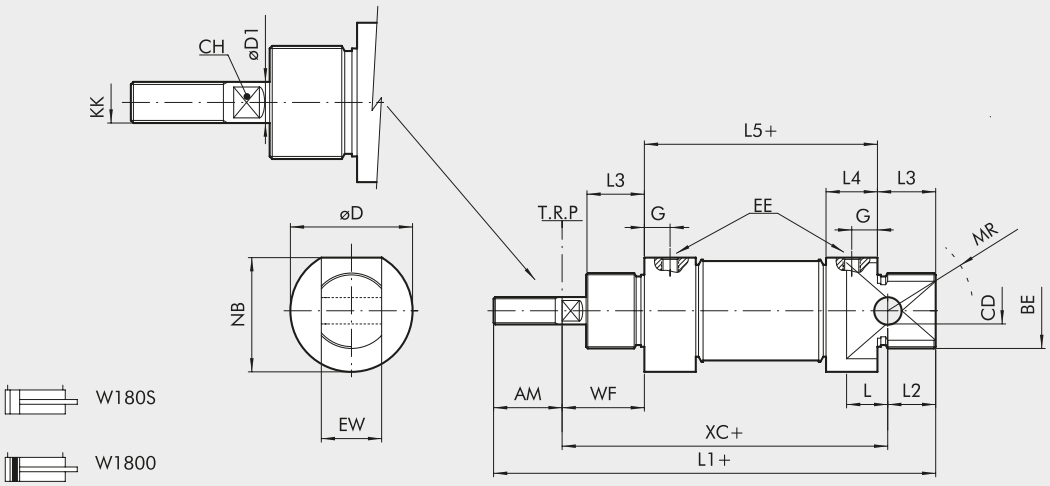

Ø	AM	BE	øCD H9	CH	øD	øD1	EE	EW d13	G	KK	L	L1	L2	L3	L5	MR	NB	WF	XC
16	16	M16x1.5	6	5	19	6	M5	12	5	M6	9	109	11	18	53	16	18	22	82
20	20	M22x1.5	8	7	27	8	G 1/8	16	8	M8	12	131	16	20	67	18	25.5	24	95
25	22	M22x1.5	8	9	30	10	G 1/8	16	8	M10x1.25	12	140	14	22	68	21	28.5	28	104

DIMENSIONS DOUBLE-ACTING THROUGH-ROD

+ = ADD STROKE
++ = ADD TWICE THE STROKE

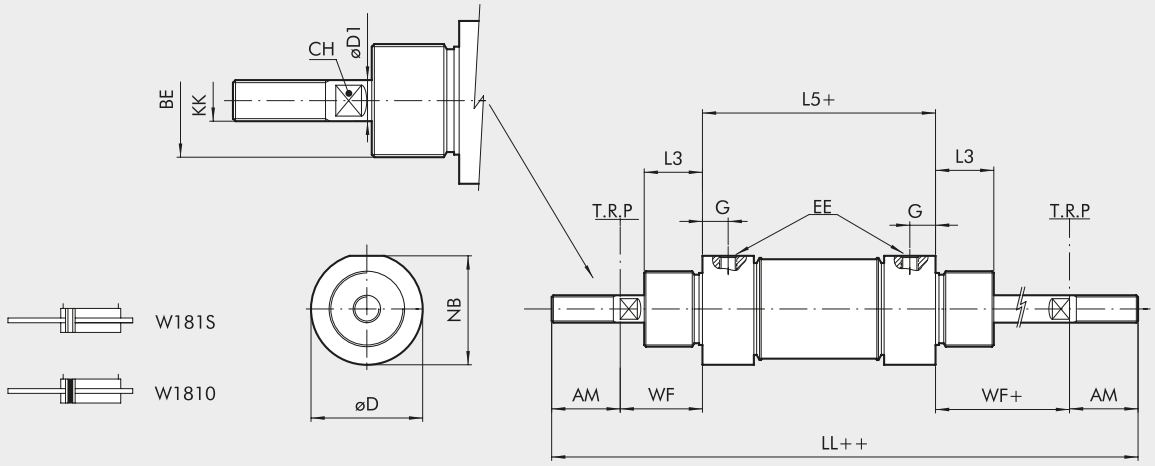

Ø	AM	BE	CH	øD	øD1	EE	G	KK	LL	L3	L5	NB	WF ±1,2
16	16	M16x1.5	5	19	6	M5	5	M6	129	18	53	18	22
20	20	M22x1.5	7	27	8	G 1/8	8	M8	155	20	67	25.5	24
25	22	M22x1.5	9	30	10	G 1/8	8	M10x1.25	168	22	68	28.5	28

KEY TO CODES

W 1 8	0	0	1 6	0 0 2 0
	TYPE	**VERSION**	**DIAMETER**	**STROKE**
Stainless steel cylinder	**0** DEM **1** DEM through-rod	**0** Standard (magnetic) **S** Non-magnetic ● **V** FKM/FPM gasket	16 20 25	✚ 0 to 500 mm

DEM: Magnetic double-acting (non-cushioned)
✚ Maximum recommended strokes. Higher values can create operating problems
● For this version the cylinder will be not magnetic

ACCESSORIES FOR STAINLESS STEEL ISO 6432 MINI-CYLINDER: FIXINGS

STAINLESS STEEL LEG MODEL A

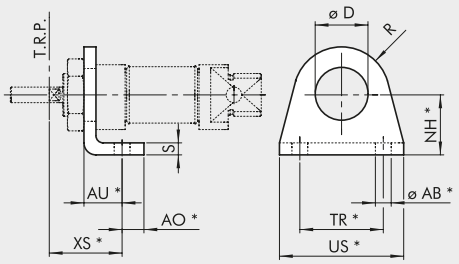

Code	Ø	ØAB	AU	AO	D	NH	XS ±1.4	R	S	TR	US	Weight [g]
W095X120001	16	5.5	14	6	16.1	20	22	13	4	32	42	42
W095X200001	20	6.6	17	8	22.1	25	36	20	5	40	54	90
W095X200001	25	6.6	17	8	22.1	25	40	20	5	40	54	90

*ISO 6432 values
Note: Individually packed

STAINLESS STEEL FLANGE MODEL C

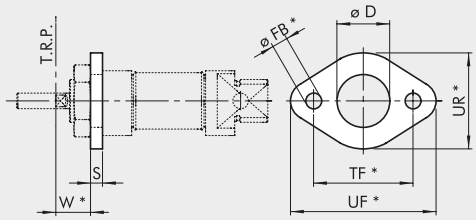

Code	Ø	D	FB	W ±1.4	S	TF	UF	UR	Weight [g]
W095X120002	16	16	5.5	18	4	40	52	30	26
W095X200002	20	22	6.6	19	5	50	66	40	52
W095X200002	25	22	6.6	23	5	50	66	40	52

*ISO 6432 values
Note: Individually packed

STAINLESS STEEL COUNTER-HINGE MODEL BC

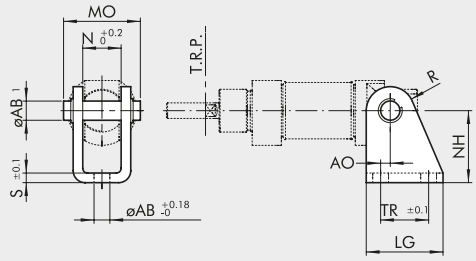

Code	Ø	AB1	AB	AO	LG	MO	N	NH	R	S	TR	Weight [g]
W095X120005	16	6	5.5	2	25	24	12.1	27	7	3	15	40
W095X200005	20	8	6.6	4	32	31	16.1	30	10	4	20	78
W095X200005	25	8	6.6	4	32	31	16.1	30	10	4	20	78

Note: Supplied complete with 1 pin and 2 snap rings

STAINLESS STEEL NUT FOR HEADS

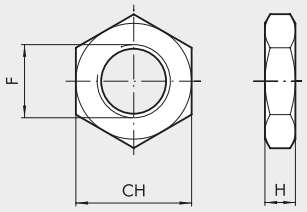

Code	Ø	CH	F	H
W095X120010	16	22	M16x1.5	5
W095X200010	20	27	M22x1.5	8
W095X200010	25	27	M22x1.5	8

Note: Individually packed

METAL WORK PNEUMATIC

STAINLESS STEEL NUT FOR PISTON RODS

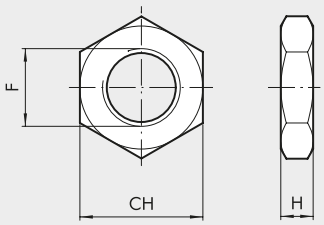

Code	Ø	CH	F	H	Weight [g]
W095X120011	**16**	10	M6	4	1
W095X200011	**20**	13	M8	5	3
W095X322011	**25**	17	M10x1.25	6	7

Note: Individually packed

STAINLESS STEEL FORK-MODEL GK-M

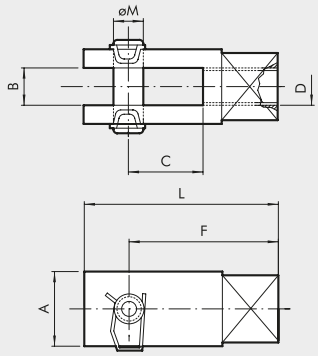

Code	Ø	A	B	C	D	F	L	Ø M
W095X120020	**16**	12	6	12	M6	24	31	6
W095X200020	**20**	16	8	16	M8	32	42	8
W095X322020	**25**	20	10	20	M10x1.25	40	52	10

Note: Individually packed

ACCESSORIES: MAGNETIC SENSORS

RETRACTABLE SENSOR

For codes and technical data, see **chapter A6**.

SENSOR, SQUARE TYPE
Latest generation,
secure fixing

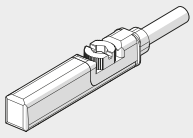

SENSOR, OVAL TYPE
Traditional

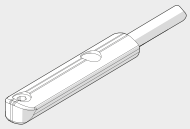

SENSOR BRACKET

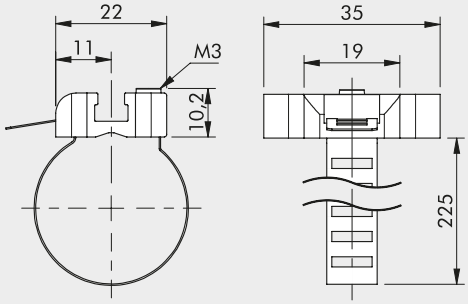

Code	Bore	Description
W0950001103	16 to 25	Sensor bracket 8 to 63

Note: Individually packed

MATERIAL
Bracket: stainless steel
Sensor holder: zamak

STAINLESS STEEL ROUND CYLINDER RNDC

Stainless steel clean profile cylinders available in different versions:
- with or without magnet execution
- double-acting - single or through-rod
- gaskets: Polyurethane or FKM/FPM (for high temperatures)

TECHNICAL DATA		POLYURETHANE	FKM/FPM
Max operating pressure	bar	10	
	MPa	1	
	psi	145	
Temperature range	°C	−10 to +80	−10 to +150 (non-magnetic cylinders)
Fluid		Unlubricated air. Lubrication, if used, must be continuous	
Bores	mm	32; 40; 50; 63	
Design		Chamfered heads	
Versions		Double-acting, Double-acting through-rod	
Magnet for sensors		All versions come complete with magnet. Supplied without magnet on request	
Standard strokes ✚	mm	max 500	
Weight		See cylinder "**General technical data**" at the beginning of the chapter	
Notes		✚ Maximum recommended strokes. Higher values can create operating problems	

COMPONENTS

① PISTON ROD: AISI 316 steel
② PISTON ROD GASKET: polyurethane or FKM/FPM
③ GUIDE BUSHING: sintered bronze
④ BARREL: AISI 304 steel
⑤ PISTON: aluminium
⑥ MAGNET: plastoferrite
⑦ PISTON GASKET: polyurethane or FKM/FPM
⑧ ⑨ HEAD:AISI 304 steel
⑩ BUFFER: polyurethane
⑪ GUIDE RING: PTFE

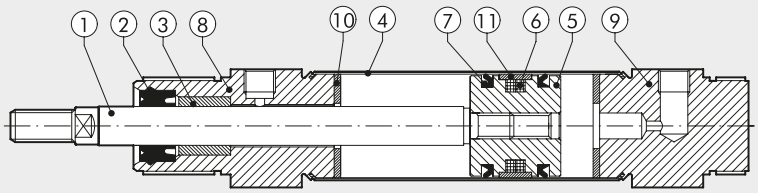

METAL WORK PNEUMATIC

DIMENSIONS OF DOUBLE-ACTING

+ = ADD STROKE

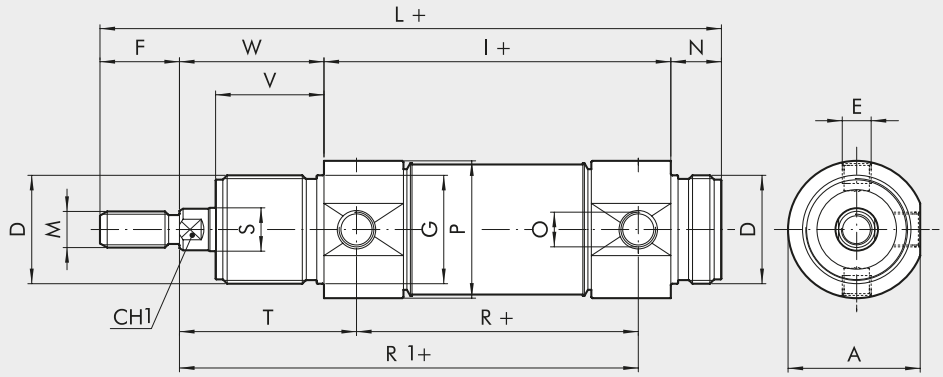

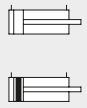

DIMENSIONS DOUBLE-ACTING THROUGH-ROD

+ = ADD STROKE
++ = ADD TWICE THE STROKE

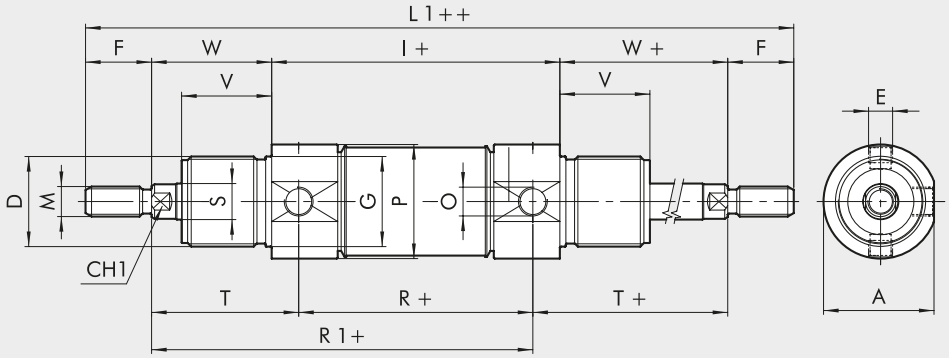

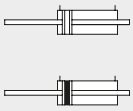

Ø	A	CH1	D	E	F	Ø G	I	L	L1	M	N	O	Ø P	R	Ø S	T	V	W
32	36.5	10	M30x1.5	M8x1	20	30	96	168	212	M10x1.5	14	G1/8	38	78	12	47	30	38
40	44	13	M38x1.5	M10x1	24	38	113	198	251	M12x1.75	16	G1/4	46	89	16	57	35	45
50	55	17	M45x1.5	M12x1.5	32	45	120	220	284	M16x2	18	G1/4	57	96	20	62	38	50
63	67.5	17	M45x1.5	M14x1.5	32	45	124	224	288	M16x2	18	G3/8	70	98	20	63	38	50

KEY TO CODES

W 1 8	0	0	3 2	0 0 3 2
	TYPE	**VERSION**	**DIAMETER**	**STROKE**
Stainless steel cylinder	**0** DEM **1** DEM through-rod	**0** Standard (magnetic) **S** Non-magnetic ● **V** FKM/FPM gasket	32 40 50 63	✚ Ø 32 to 63 stroke 0 to 500 mm

DEM: Magnetic double-acting (non-cushioned)
✚ Maximum recommended strokes. Higher values can create operating problems
● For this version the cylinder will be not magnetic

ACCESSORIES FOR STAINLESS STEEL ROUND CYLINDER: FIXINGS

STAINLESS STEEL LEG MODEL AC

+ = ADD STROKE

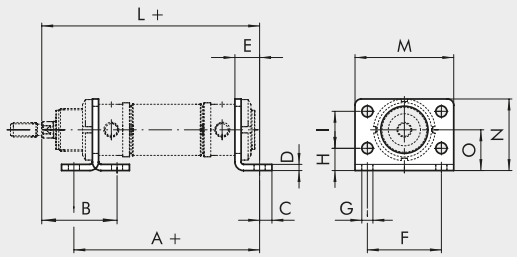

Code	Ø	A	B	C	D	E	F	G	H	I	L	M	N	O
W095X320002	**32**	124	48	7	4	14	52	7	14	28	148	66	49	28
W095X400002	**40**	153	60	10	5	20	60	9	18	30	178	80	58	33
W095X500002	**50**	160	64	10	6	20	70	9	20	40	190	90	70	40
W095X630002	**63**	164	64	10	6	20	76	9	20	50	194	96	80	45

Note: Individually packed

STAINLESS STEEL COUNTER-HINGE MODEL BC

+ = ADD STROKE

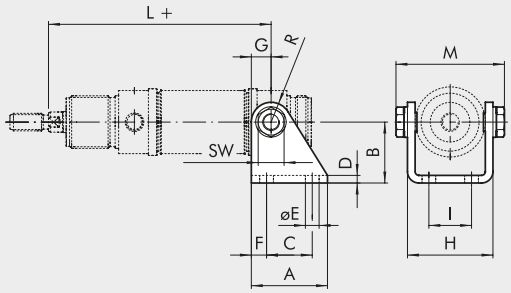

Code	Ø	A	B	C	D	E	F	G	H	I	L	M	R
W095X320005	**32**	40	35	24	4	7	8	12	46.1	20	125	58.1	12
W095X400005	**40**	50	40	30	5	9	10	13	56.1	28	146	70.1	13
W095X500005	**50**	54	45	34	6	9	10	14	69.1	36	158	86.1	14
W095X630005	**63**	65	50	35	6	9	15	16	82.1	42	161	99.1	16

Nota: Supplied complete with 2 screws

STAINLESS STEEL HEAD RING NUT MODEL G

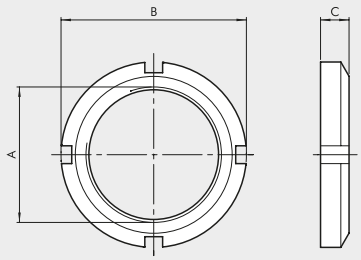

Code	Ø	A	B	C
W095X320010	**32**	M30x1.5	45	7
W095X400010	**40**	M38x1.5	52	8
W095X500010	**50**	M45x1.5	58	9
W095X500010	**63**	M45x1.5	58	9

Note: Individually packed

STAINLESS STEEL FORK-MODEL GK-M

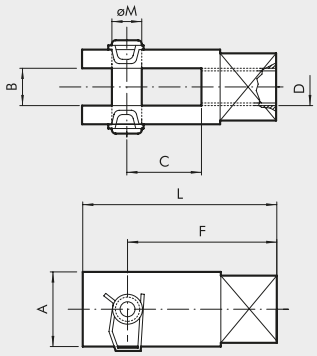

Code	Ø	A	B	C	D	F	L	Ø M
W095X320020	**32**	20	10	20	M10x1.5	40	52	10
W095X400020	**40**	24	12	24	M12x1.75	48	62	12
W095X500020	**50**	32	16	32	M16x2	64	83	16
W095X500020	**63**	32	16	32	M16x2	64	83	16

Note: Individually packed

METAL WORK PNEUMATIC

STAINLESS STEEL NUT FOR PISTON RODS

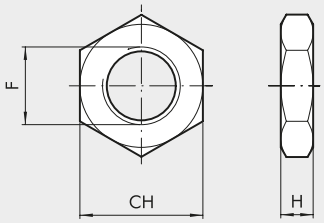

Code	Ø	F	CH	H	Weight [g]
W095X320011	32	M10x1.5	17	6	6
W095X400011	40	M12x1.75	19	7	12
W095X500011	50	M16x2	24	8	20
W095X500011	63	M16x2	24	8	20

Note: Individually packed

STAINLESS STEEL OSCILLATING PIN

+ = ADD STROKE

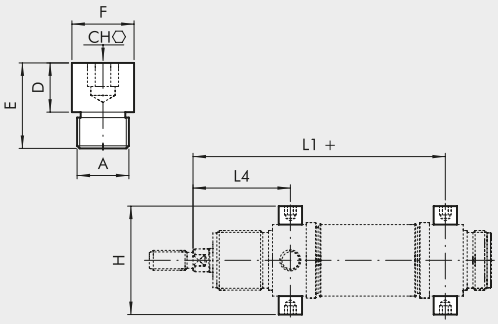

Code	Ø	A	CH	D	E	øF	H	L1	L4
W095X320007	32	M8X1	5	8	14	10	51	125	47
W095X400007	40	M10X1	6	9.5	16.5	12	61	146	57
W095X500007	50	M12X1.5	6	11	20	14	75	158	62
W095X630007	63	M14X1.5	8	13	26	16	92	161	63

Note: 2- piece pack

ACCESSORIES: MAGNETIC SENSORS

RETRACTABLE SENSOR

For codes and technical data, see **chapter A6**.

SENSOR, SQUARE TYPE
Latest generation,
secure fixing

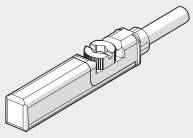

SENSOR, OVAL TYPE
Traditional

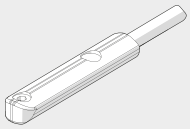

SENSOR BRACKET

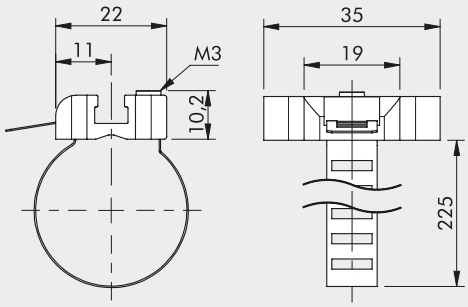

Code	Bore	Description
W0950001103	32 to 63	Sensor bracket 8 to 63

Note: Individually packed

MATERIAL
Bracket: stainless steel
Sensor holder: zamak

STAINLESS STEEL ISO 15552 CYLINDER (EX ISO 6431)

Stainless steel cylinders made to ISO 15552 available in various versions and with a wide range of accessories:
- with or without magnet execution
- double-acting – single- or through-rod
- gaskets: Polyurethane or FKM/FPM (for high temperatures)
- fixing accessories, guide units and mechanical piston rod lock

TECHNICAL DATA		POLYURETHANE	FKM/FPM
Max operating pressure	bar	10	
	MPa	1	
	psi	145	
Temperature range	°C	–10 to +80	–10 to +150 (non magnetic cylinders)
Fluid		Unlubricated air. Lubrication, if used, must be continuous	
Bores	mm	32; 40; 50; 63; 80; 100; 125	
Design		Heads with tie rods	
Standard strokes ✚	mm	max 1000	
Versions		Double-acting cushioned, Double-acting through-rod cushioned	
Magnet for sensors		All versions come complete with magnet. Supplied without magnet on request	
Weight		See cylinder "**General technical data**" at the beginning of the chapter	
Notes		✚ Maximum recommended strokes. Higher values can create operating problems	

COMPONENTS

① PISTON ROD: AISI 316 steel
② HEAD: AISI 304 steel
③ PISTON ROD GASKET: polyurethane or FKM/FPM
④ GUIDE BUSHING: sintered bronze
⑤ BARREL: AISI 304 steel
⑥ ENBLOC GASKET: NBR or FKM/FPM
⑦ MAGNET: plastoferrite
⑧ Static O-rings: NBR or FKM/FPM
⑨ CUSHIONING GASKET: polyurethane or FKM/FPM
⑩ CUSHIONING NEEDLE: AISI 304 steel
⑪ TIE ROD: AISI 316 steel
⑫ NEEDLE-RETAINING RING: technopolymer

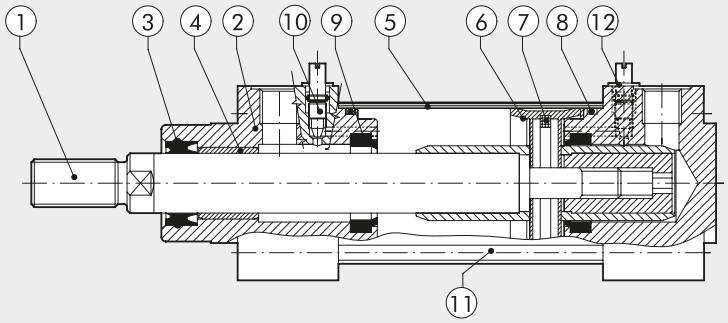

METAL WORK PNEUMATIC

DIMENSIONS OF DOUBLE-ACTING

+ = ADD STROKE

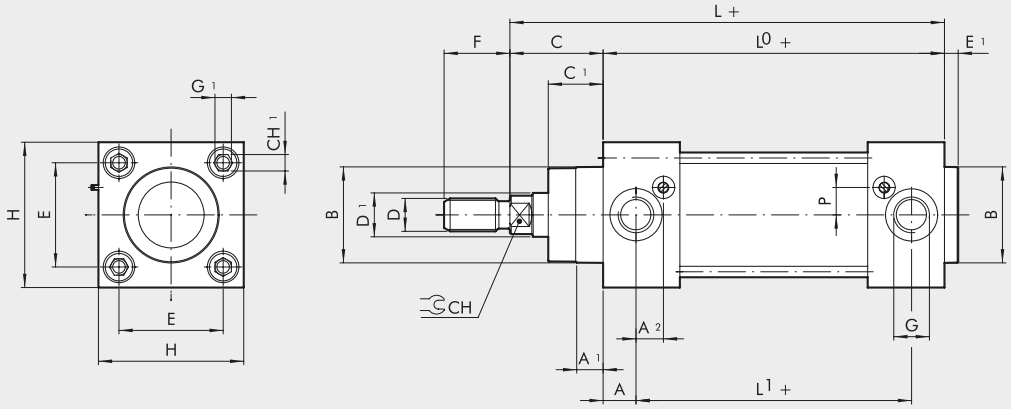

W184

DIMENSIONS DOUBLE-ACTING THROUGH-ROD

+ = ADD STROKE
++ = ADD TWICE THE STROKE

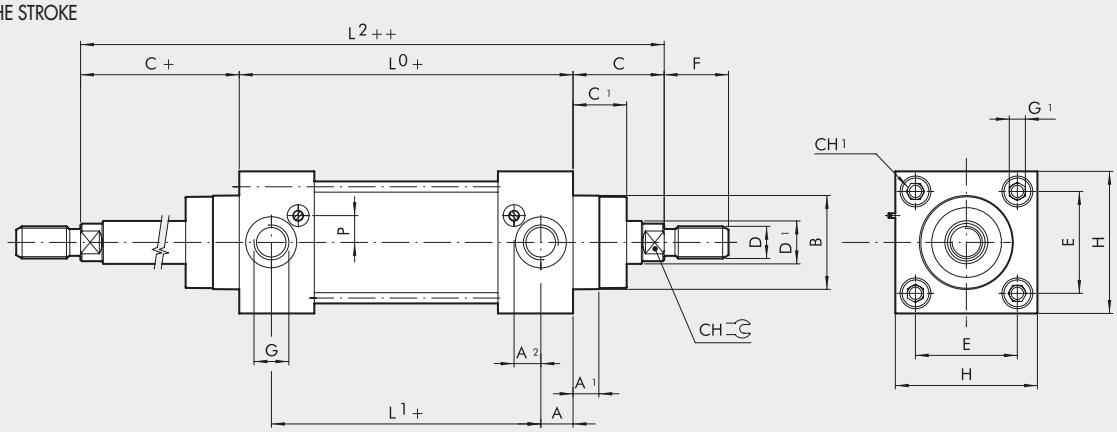

W185

Ø.	A	A_1	A_2	B	C	C_1	CH	CH_1	D	D_1	E	E_1	F	G	G_1	H	L	L_0	L_1	L_2	P
32	13	9	11.3	30	26	18	10	6	M10x1.25	12	32.5	4	22	G1/8	M6	50	120	94	68	146	6
40	14	9	13	35	30	22	13	6	M12x1.25	16	38	4	24	G1/4	M6	55	135	105	77	165	8
50	14	9	12.7	40	37	25.5	17	8	M16x1.5	20	46.5	4	32	G1/4	M8	65	143	106	78	180	11.8
63	16	9	15.8	45	37	25	17	8	M16x1.5	20	56.5	4	32	G3/8	M8	75	158	121	89	195	11.7
80	17	10	16.3	45	46	35	22	-	M20x1.5	25	72	4	40	G3/8	M10	95	174	128	94	220	15.5
100	18	10	15.5	55	51	38	22	-	M20x1.5	25	89	4	40	G1/2	M10	110	189	138	102	240	15.5
125	18	11	20	60	65	46	27	-	M27x2	32	110	6	54	G1/2	M12	140	225	160	124	290	15

KEY TO CODES

W 1 8	4	0	3 2	0 0 3 2
	TYPE	**VERSION**	**DIAMETER**	**STROKE**
Stainless steel cylinder	**4** DEMA **5** DEMA through-rod	**0** Standard (magnetic) **S** Non-magnetic ● **V** FKM/FPM gasket	32 40 50 63 80 ■ 100 ■ 125	✚ 0 to 1000 mm

DEMA: Magnetic double-acting (cushioned)
✚ Maximum recommended strokes. Higher values can create operating problems
● For this version the cylinder will be not magnetic
■ In the code of cylinder with letter in fifth position Ø 100 becomes A1; Ø 125 becomes A2

ACCESSORIES FOR STAINLESS ISO 15552 CYLINDER: FIXINGS

STAINLESS STEEL INTERMEDIATE HINGE - MODEL EN

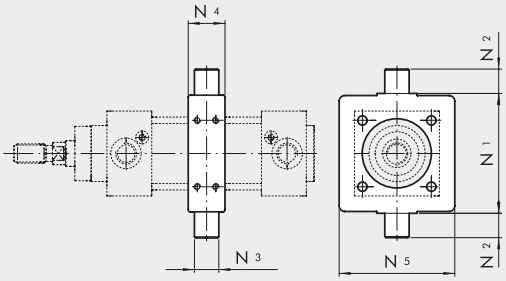

Code	Ø	N_1	N_2	N_3	N_4	N_5	Weight [g]
W095X322007	32	50	12	12	15	46	140
W095X402007	40	63	16	16	20	59	330
W095X502007	50	75	16	16	20	69	390
W095X632007	63	90	20	20	25	84	730
W095X802007	80	110	20	20	25	102	925
W095XA12007	100	132	25	25	30	125	1700
W095XA22007	125	160	25	25	32	155	2580

Note: Supplied complete with 8 grub screws

STAINLESS STEEL SHORT FOOT MOUNTING

+ = ADD THE STROKE

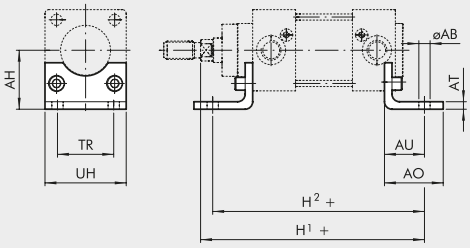

Code	Ø	Ø AB	AH	AO	AT	AU	TR	UH	H_1	H_2	Weight [g]
W095X322001	32	7	32	35	4	24	32	45	145	143	85
W095X402001	40	9	36	36	4	28	36	52	163	161	95
W095X502001	50	9	45	47	5	32	45	65	175	170	200
W095X632001	63	9	50	45	5	32	50	75	190	185	225
W095X802001	80	12	63	55	6	41	63	95	215	210	435
W095XA12001	100	14	71	57	6	41	75	115	230	220	555
W095XA22001	125	16	90	70	8	45	90	140	270	250	1145

Note: Individually packed with 2 screws

STAINLESS STEEL FEMALE HINGE - MODEL B

+ = ADD THE STROKE

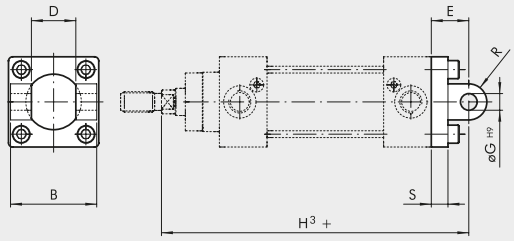

Code	Ø	B	D	E	Ø G	H_3	R	S	Weight [g]
W095X322003	32	45	26	22	10	142	10	9	175
W095X402003	40	52	28	25	12	160	12	9	250
W095X502003	50	60	32	27	12	170	12	11	425
W095X632003	63	70	40	32	16	190	16	11	635
W095X802003	80	90	50	36	16	210	16	14	1270
W095XA12003	100	110	60	41	20	230	20	14	2000
W095XA22003	125	130	70	50	25	275	25	20	3715

Note: Supplied with 4 screws, 4 washers. **WITHOUT PIN.**

STAINLESS STEEL FEMALE HINGE PIN

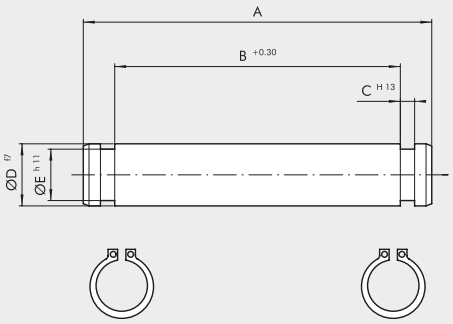

Code	Ø	A	B	C	D	E	Weight [g]
W095X322050	32	53	46	1.1	10	9.6	35
W095X402050	40	60	53	1.1	12	11.5	55
W095X502050	50	68	61	1.1	12	11.5	65
W095X632050	63	78	71	1.1	16	15.2	125
W095X802050	80	98	91	1.1	16	15.2	160
W095XA12050	100	118	111	1.3	20	19	295
W095XA22050	125	139	132	1.3	25	23.9	540

Note: Supplied with 2 snap-rings

METAL WORK PNEUMATIC

STAINLESS STEEL MALE HINGE - MODEL BA

+ = ADD THE STROKE

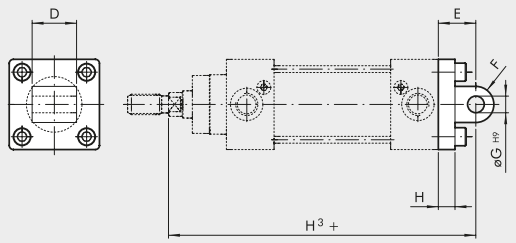

Code	Ø	D	E	F	Ø G	H	H_3	Weight [g]
W095X322004	32	26	22	10	10	9	143	195
W095X402004	40	28	25	12	12	9	160	265
W095X502004	50	32	27	12	12	11	170	445
W095X632004	63	40	32	16	16	11	190	715
W095X802004	80	50	36	16	16	14	210	1375
W095XA12004	100	60	41	20	20	14	230	2165
W095XA22004	125	70	50	25	25	20	275	3800

Note: Supplied with 4 screws, 4 washers

STAINLESS STEEL ISO COUNTER-HINGE FOR MODEL B - MODEL GL

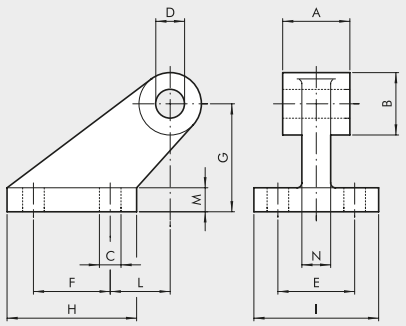

Code	Ø	A	B	C	D	E	F	G	H	I	L	M	N	Weight [g]
W095X322008	32	26	20	6.6	10	38	18	32	31	51	3	8	10	165
W095X402008	40	28	22	6.6	12	41	22	36	35	54	2	10	15	235
W095X502008	50	32	26	9	12	50	30	45	45	65	3	12	16	460
W095X632008	63	40	30	9	16	52	35	50	50	67	2	14	16	590
W095X802008	80	50	30	11	16	66	40	63	60	86	7	14	20	1000
W095XA12008	100	60	38	11	20	76	50	71	70	96	5	17	20	1515
W095XA22008	125	70	45	14	25	94	60	90	90	124	10	20	30	3170

Note: Individually packed

STAINLESS STEEL FRONT FLANGE - MODEL C

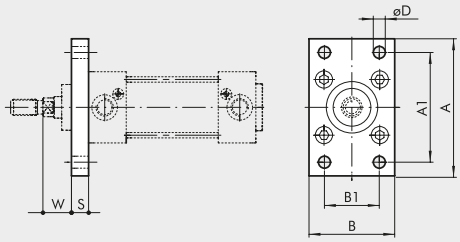

Code	Ø	A	A_1	B	B_1	S	ØD	W	Weight [g]
W095X322002	32	80	64	45	32	10	7	16	220
W095X402002	40	90	72	52	36	10	9	20	280
W095X502002	50	110	90	65	45	12	9	25	540
W095X632002	63	120	100	75	50	12	9	25	680
W095X802002	80	150	126	95	63	16	12	30	1550
W095XA12002	100	170	150	115	75	16	14	35	2100
W095XA22002	125	205	180	140	90	20	16	45	3950

Note: Supplied with 4 screws

STAINLESS STEEL REAR FLANGE - MODEL C

+ = ADD THE STROKE

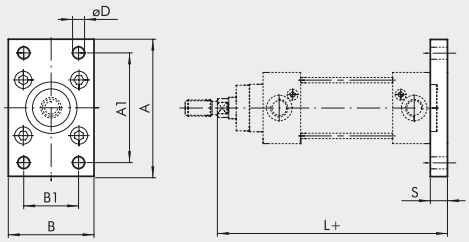

Code	Ø	A	A_1	B	B_1	S	ØD	L	Weight [g]
W095X322002	32	80	64	45	32	10	7	130	220
W095X402002	40	90	72	52	36	10	9	145	280
W095X502002	50	110	90	65	45	12	9	153	540
W095X632002	63	120	100	75	50	12	9	168	680
W095X802002	80	150	126	95	63	16	12	184	1550
W095XA12002	100	170	150	115	75	16	14	199	2100
W095XA22002	125	205	180	140	90	20	16	235	3950

Note: Supplied with 4 screws

STAINLESS STEEL NUT FOR PISTON RODS

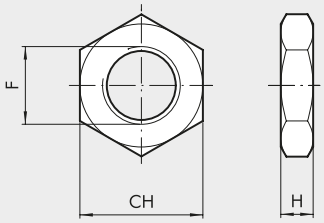

Code	Ø	F	H	CH	Weight [g]
W095X322011	**32**	M10x1.25	6	17	8
W095X402011	**40**	M12x1.25	7	19	11
W095X502011	**50**	M16x1.5	8	24	18
W095X502011	**63**	M16x1.5	8	24	18
W095X802011	**80**	M20x1.5	9	30	31
W095X802011	**100**	M20x1.5	9	30	31
W095XA22011	**125**	M27x2	12	41	81

Note: Individually packed

STAINLESS STEEL FORK-MODEL GK-M

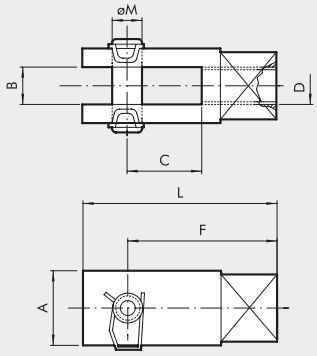

Code	Ø	A	B	C	D	F	L	Ø M	Weight [g]
W095X322020	**32**	20	10	20	M10x1.25	40	52	10	90
W095X402020	**40**	24	12	24	M12x1.25	48	62	12	145
W095X502020	**50**	32	16	32	M16x1.5	64	83	16	325
W095X502020	**63**	32	16	32	M16x1.5	64	83	16	325
W095X802020	**80**	40	20	40	M20x1.5	80	105	20	680
W095X802020	**100**	40	20	40	M20x1.5	80	105	20	680

Note: Individually packed

ACCESSORIES: MAGNETIC SENSORS

RETRACTABLE SENSOR

For codes and technical data, see **chapter A6**.

SENSOR, SQUARE TYPE
Latest generation,
secure fixing

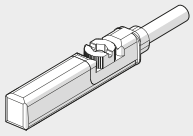

SENSOR, OVAL TYPE
Traditional

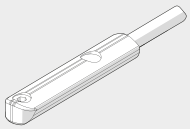

SENSOR BRACKET

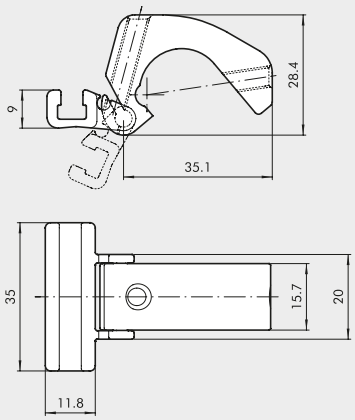

Code	Bore	Description
W0950001100	32 to 125	Sensor bracket

Note: Individually packed

MATERIAL
Bracket: aluminium
Sensor holder: aluminium
Fixing screw: stainless steel