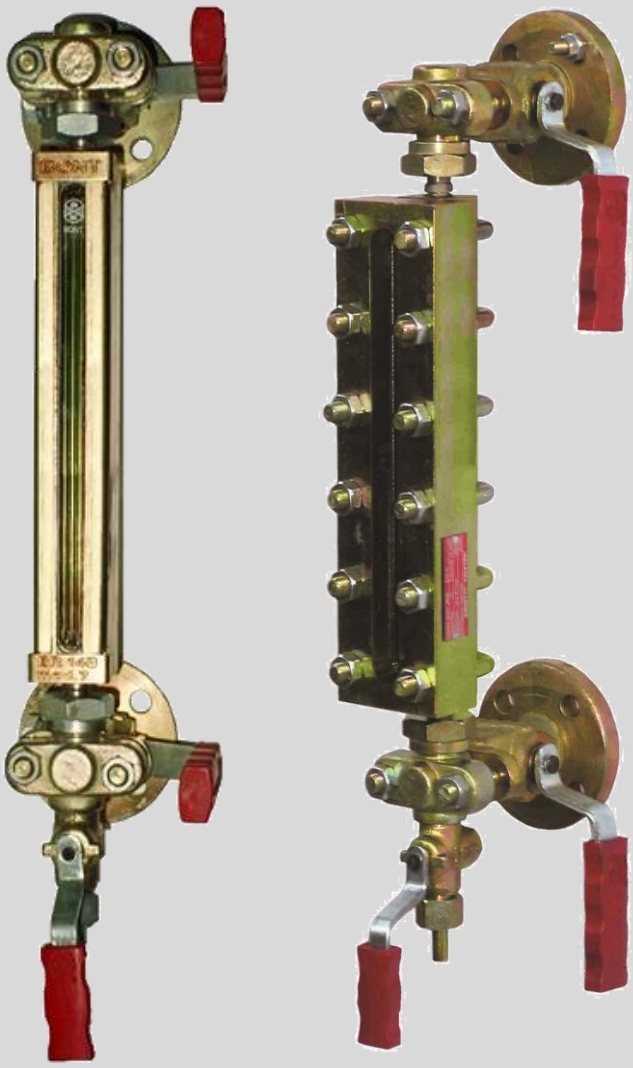

BONETTI®

BONT® GLASS LEVEL GAUGES

BONETTI®

GLASS LEVEL GAUGES

General information

VALFTEK manufactures glass and magnetic level gauges under Bonetti license. This catalogue describes glass level gauges.

When you only state the operating conditions, namely :

- Fluid
- Working pressure
- Working temperature

We are able to supply the most suitable level gauge from both the points of view functionality and price.

There are three basic types of glass level gauges :

- Reflex
- Transparent
- Bicolour

BONT® Reflex Level Gauges (Fig.1)

Working principle :

The liquid level is distinguished by the different brightness of the reflex glass in the water or in the steam space. In fact, where there is liquid in contact with the glass, the incidental light is refracted to the inside of the gauge and absorbed; in the steam space, the incidental light is reflected against the glass grooves and the glass appears very bright (Fig.1).

Applications :

Reflex level gauges can be used in most of applications and offer great advantages in terms of :

-low initial cost

-low operating cost

-easy level reading

Reflex level gauges can not be used in certain cases as for example :

-when the separation level between two liquids has to be read (interface),

-when besides the level indication, the observation of the liquid colour is required,

-when the process fluid is high-pressure water steam, since in this case the glass must be protected from the solvent action of the boiler water by using mica shields

-when the process fluid is such that can corrode the glass (e.g. high temperature alkaline solutions or hydrofluoric acid), since mica shields or polytrifluorochloroethylene shields must be used to protect the glass.

BONT® Transparent Level Gauges (Fig.2 and 3)

Working principle :

Apart from glass tube level gauges, transparent level gauges are always fitted with two plate transparent glasses between which the fluid is contained. The fluid level is indicated as the result of the different transparency of the two media (Fig.2) and in some cases (for water steam), by conveying upwards on to the surface of separation (between liquid and gaseous substances) a source of light (Fig.3) located at the back of the gauge, the rays of which are totally reflected down to the observer.

Applications :

Transparent level gauges are suitable for almost all installations.

In fact they permit :

-the use of mica shields or polytrifluorochloroethylene shields to protect the glass from the corrosive action of the process fluid,

-the observation of interface,

-the observation of the liquid colour.

BONT® Bicolour Level Gauges (Fig.4)

Working principle :

The opposite glasses fitted into these bicolour level gauges are not parallel to each other. By means of a suitable illuminator into which a red and a green screens are fitted.

The portion of visible length occupied by steam appears red whereas the portion of visible length occupied by water appears green.

The level reading is very easy even at a considerable distance. The reading of the bicolour level gauges is not affected by the blind spaces between one port hole and the successive one (Fig.4).

Applications :

Their main application is on high pressure steam boilers.

BONT® Bicolour Level Gauges with parallel glasses (Fig.5)

Working principle :

It is a variation of transparent level gauges, however equipped with two reflex glasses and a back illuminator, fitted with suitable coloured filters. The sharp reading is given by the contrast between the bright colour (usually red) of filters in the lower part containing liquid and the colour of upper part of visible window (Fig.5).

Applications :

These level gauges are particularly suitable for liquids :

-colourless,

-very fluid,

-non-corrosive for glasses (e.g. ammoniacal solutions, trichloroethylene, water steam up to 32 bar, etc.)

Fig. 1 Reflex

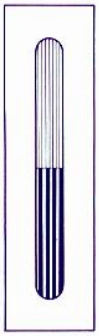

Fig.2 Transparent

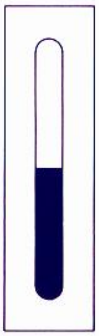

Fig.3 Transparent

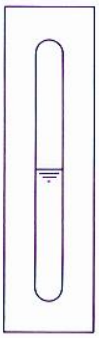

Fig.4 Bicolour

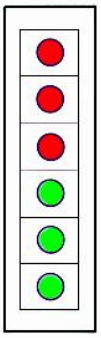

Fig.5 Bicolour

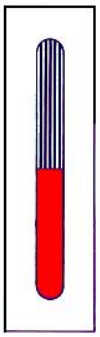

BONETTI®

GLASS LEVEL GAUGES

Type, Material and Applications

Type		Material Code	Max. operating Conditions		Pressure Rating		Fluids
			Pressure bar	Temp. ^{0}C	ANSI Class	DIN PN (bar)	
REFLEX TYPE	BR14B - G11	52	12	187		16	Water steam, other fluids
	BR12 – GP11 BR12 - G11	52	32	236		40	Water steam
		52,64	64	120			Other fluids
			40	300 *			
	BR22 – GP11	52	12	187		16	Water steam
	BR22 – GP12	52,64	28	38			Other fluids
			10	300 *			
	BR23 – GP11	52	22	216			Water steam
	BR23 – GP12	52,63,64	105	38	600	100	Other fluids
			80	300 *			
	BR24 – GP11	52	32	236			Water steam
	BR24 – GP12	52,63,64	165	38	900	100	Other fluids
			105	300 *			
	BR28 – G41	51,52,63,64	200	38	1500	250	Other fluids w. steam excepted
			160	300 *			
	BR28 – GP12	52,63,64	165	38			Any fluids w. steam excepted
			105	300 *			
	BR25 – GP12	52,63,64	105	38	900	100	Any fluids w. steam excepted
			62	300 *			
	BR13 – G51	52	400	120	(2500)	(400)	Any fluids
	BR26 & BR27	52,55,61 62,63,64			(600)		Any fluids w. steam excepted
TRANSPARENT TYPE	BTV – GP11	52	6	158			Water steam
		52,63,64	12	38			Non dangerous fluids
	BT23 – GP11	52	12	187			Water steam
	BT23 – GP12	52,63,64	51	38	300		Other fluids
			30	300 *			
	BT24 – GP11	52	20	211			Water steam
	BT24 – GP12	52,63,64	105	38	600	100	Other fluids
			62	400			
	BT25 – GP12	52,63,64	105	38	600	100	Any fluids w. steam excepted
			62	300 *			
	BT28 – GP11	52	50	264			Water steam
	BT28 – GP12	52,63,64	120	38	600	100	Other fluids
			80	300 *			
	BT29 – G41	52,63,64	165	38	900	160	Any fluids w. steam excepted
			100	300 *			
	BT33 – G52	51	90	302			Water steam
	BT32 – G52	51	103	313			Water steam
	BT26 & BT27	52,55,61 62,63,64			(600)		Any fluids w. steam excepted
BICOLOUR	BC24 – GP11	52	20	211			Water steam
	BC28 – GP11	52	40	249			
	BC33 – G52	52	90	302			
	BC32 – G52	51	103	313			
	BC1 – G55	51	210	368			

*Note : * Maximum allowable temperature according to DIN 7081/1999-05 .*
For operating condition with temperature over 300 ^{0}C , please apply to our sales department.
The shown rating is an indication only : level gauge rating can change according to the level gauge valve fitted on it.

Material code	Body & Wetted parts	Trim of shut-off valves	Remarks	Application
52	Forged carbon steel	Stainless steel	Exclusion of copper, silver and their alloys	General purpose
64	Forged stainless steel (AISI316)	Stainless steel (AISI316)	External not wetted parts of carbon steel. Exclusion of copper, silver and their alloys	Corrosive fluids

BONETTI®

Reflex Glass Level Gauges

Model : BR14B
Shut-off & drain valve : G11
Pressure rating : PN16

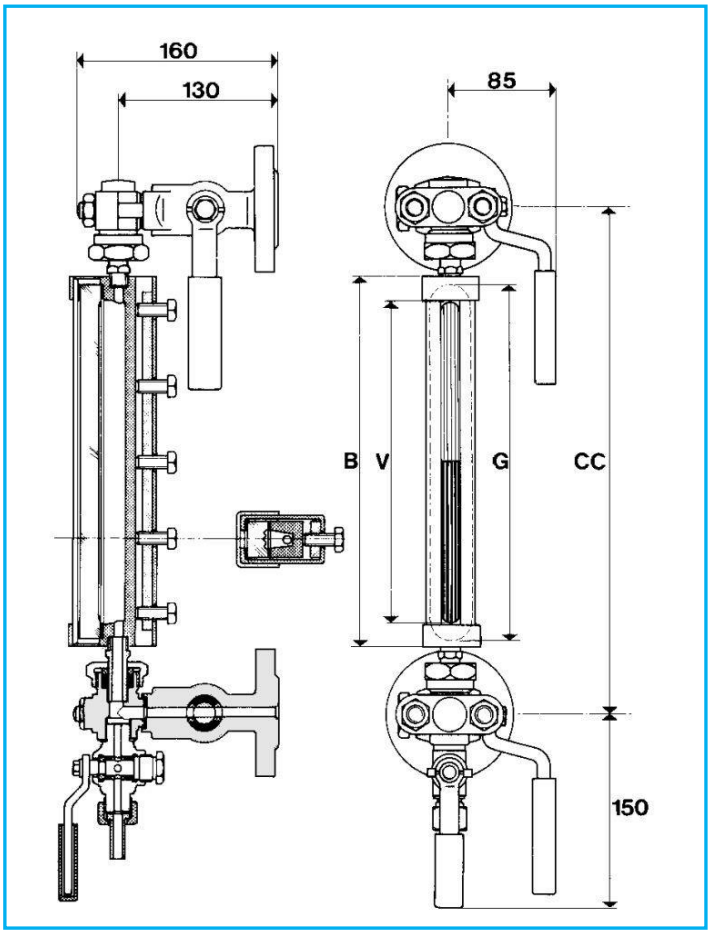

Technical features :

- Connections between gauge and valves are made by end tubes and stuffing boxes.
- Inside passage through the gauge is 10mm
- Operating conditions and material schedules on page 3.
- BR14B gauges are fitted with reflex glasses type B.
- Standard connections to vessel are PN40 DN20 flanges and other ratings and sizes may be supplied on request.
- Bolting torque of BR14B is 30 Nm .

Sizes	Centre to centre distances	Length of Body	Visible Length	Glass Length	Weight
	CC	B	V	G	Kg
I	235	128	93	115	10,05
II	260	153	118	140	10,30
III	285	178	143	165	10,80
IV	310	203	168	190	11,10
V	340	233	198	220	11,35
VI	370	263	228	250	12,00
VII	400	293	258	280	12.20
VIII	440	333	298	320	12,85
IX	460	353	318	340	13,05
2xIV	515	408	373	190	13,90
2xV	575	468	433	220	14,40
2xVI	635	528	493	250	15,70
2xVII	695	588	553	280	16,10
2xVIII	775	668	633	320	17,40
2xIX	815	708	673	340	17,80
3xVI	900	793	758	250	19,40
3xVII	990	883	848	280	20,00
3xVIII	1110	1003	968	320	21,95
3xIX	1170	1063	1028	340	22,55
4xVII	1285	1178	1143	280	23,90
4xVIII	1445	1338	1303	320	26,50
4xIX	1525	1418	1383	340	27,30
5xVII	1580	1473	1438	280	27,80
5xVIII	1780	1673	1638	320	31,05
5xIX	1880	1773	1738	340	32,05
6xVIII	2115	2008	1973	320	35,60
6xIX	2235	2128	2093	340	36,80
7xIX	2590	2483	2448	340	41,55

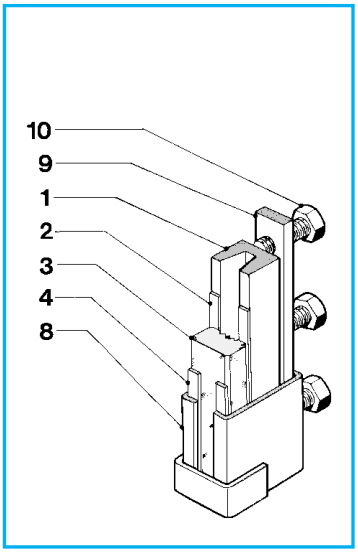

1-	Centre Piece
2-	Sealing Joint (Graphite)
3-	Reflex Glasses
4-	Cushion Joint (Graphite)
8-	Gauge Body
9-	Wedge Piece
10-	Tightening Bolt

Dimensions are in mm. We reserve the right to carry out any necessary modifications on materials & construction without notice.

BONETTI®

Reflex Glass Level Gauges

Model : BR24
Shut-off & drain valve : G11
Pressure rating : PN40

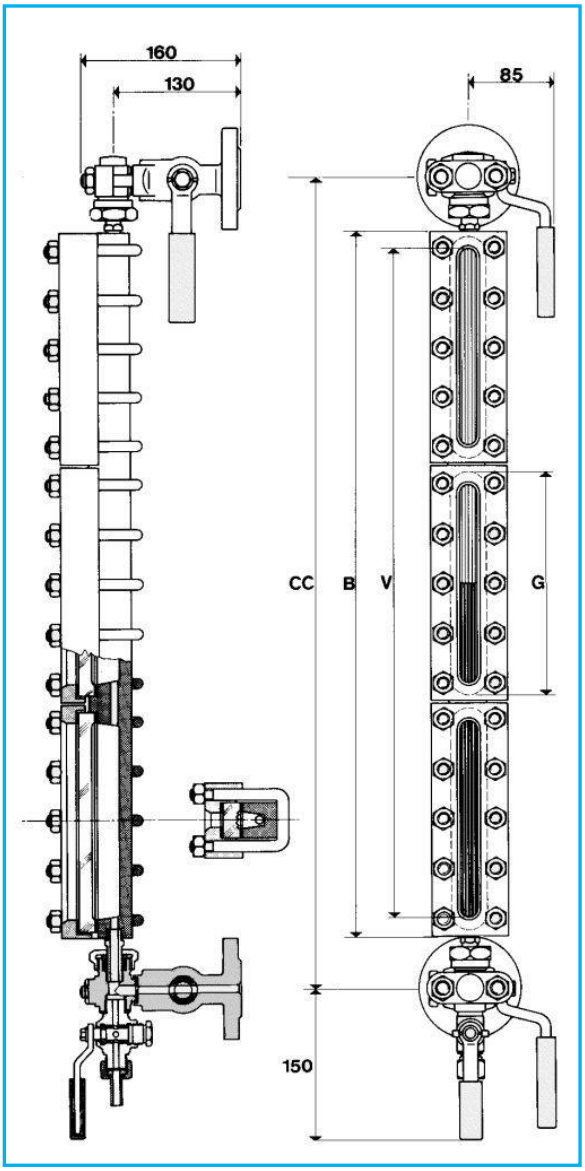

Technical features :

- Connections between gauge and valves are made by end tubes and stuffing boxes.
- Inside passage through the gauge is 10mm
- Operating conditions and material schedules on page 3.
- BR24 gauges are fitted with reflex glasses type B.
- Standard connections to vessel are PN40 DN20 flanges and other ratings and sizes may be supplied on request.
- Bolting torque of BR24 is 50 Nm .

Sizes	Centre to centre distances	Length of Body	Visible Length	Glass Length	Weight
	CC	B	V	G	Kg
I	235	128	93	115	12,85
II	260	153	118	140	13,45
III	285	178	143	165	14,55
IV	310	203	168	190	15,15
V	340	233	198	220	16,25
VI	370	263	228	250	17,35
VII	400	293	258	280	17,95
VIII	440	333	298	320	19,20
IX	460	353	318	340	20,15
2xIV	515	408	373	190	21,85
2xV	575	468	433	220	24,15
2xVI	635	528	493	250	26,30
2xVII	695	588	553	280	27,75
2xVIII	775	668	633	320	29,90
2xIX	815	708	673	340	31,70
3xVI	900	793	758	250	35,25
3xVII	990	883	848	280	37,55
3xVIII	1110	1003	968	320	40,60
3xIX	1170	1063	1028	340	43,25
4xVII	1285	1178	1143	280	47,35
4xVIII	1445	1338	1303	320	51,30
4xIX	1525	1418	1383	340	54,80
5xVII	1580	1473	1438	280	57,15
5xVIII	1780	1673	1638	320	62,00
5xIX	1880	1773	1738	340	66,35
6xVIII	2115	2008	1973	320	72,70
6xIX	2235	2128	2093	340	77,90
7xIX	2590	2483	2448	340	89,45

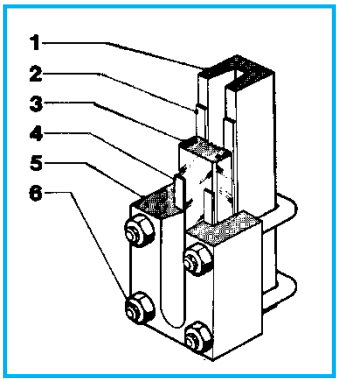

1-	Centre Piece
2-	Sealing Joint (Graphite)
3-	Reflex Glasses
4-	Cushion Joint (Graphite)
5-	Cover Plate
6-	U Stud bolts with nuts

Dimensions are in mm. We reserve the right to carry out any necessary modifications on materials & construction without notice.

BONETTI®

Transparent Level Gauges

Model : BT23
Shut-off & drain valve : G11
Pressure rating : PN16

Technical features :

- Connections between gauge and valves are made by end tubes and stuffing boxes.
- Inside passage through the gauge is 10mm
- Operating conditions and material schedules on page 3.
- BT23 gauges are fitted with transparent glasses type B.
- Standard connections to vessel are PN40 DN20 flanges and other ratings and sizes may be supplied on request.
- Bolting torque of BT23 is 50 Nm .

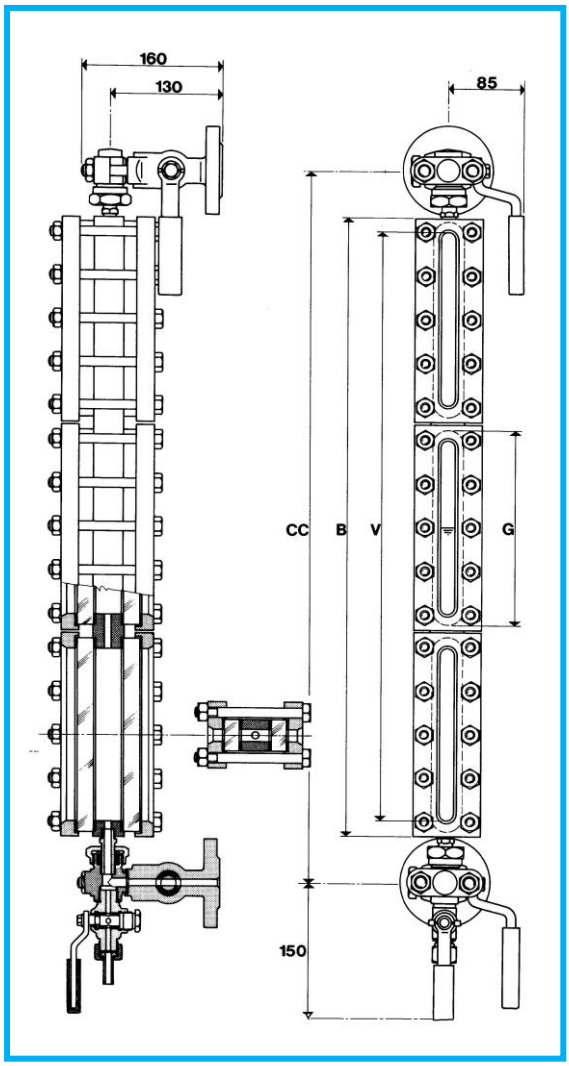

Sizes	Centre to centre distances	Length of Body	Visible Length	Glass Length	Weight
	CC	B	V	G	Kg
I	235	128	93	115	10,80
II	260	153	118	140	11,90
III	285	178	143	165	12,30
IV	310	203	168	190	12,90
V	340	233	198	220	13,90
VI	370	263	228	250	14,65
VII	400	293	258	280	15,60
VIII	440	333	298	320	16,70
IX	460	353	318	340	17,40
2xIV	515	408	373	190	18,90
2xV	575	468	433	220	20,85
2xVI	635	528	493	250	22,40
2xVII	695	588	553	280	24,50
2xVIII	775	668	633	320	26,70
2xIX	815	708	673	340	27,70
3xVI	900	793	758	250	30,30
3xVII	990	883	848	280	33,20
3xVIII	1110	1003	968	320	36,45
3xIX	1170	1063	1028	340	38,60
4xVII	1285	1178	1143	280	41,95
4xVIII	1445	1338	1303	320	46,30
4xIX	1525	1418	1383	340	49,20
5xVII	1580	1473	1438	280	50,75
5xVIII	1780	1673	1638	320	56,20
5xIX	1880	1773	1738	340	59,80
6xVIII	2115	2008	1973	320	66,10
6xIX	2235	2128	2093	340	70,40
7xIX	2590	2483	2448	340	80,85

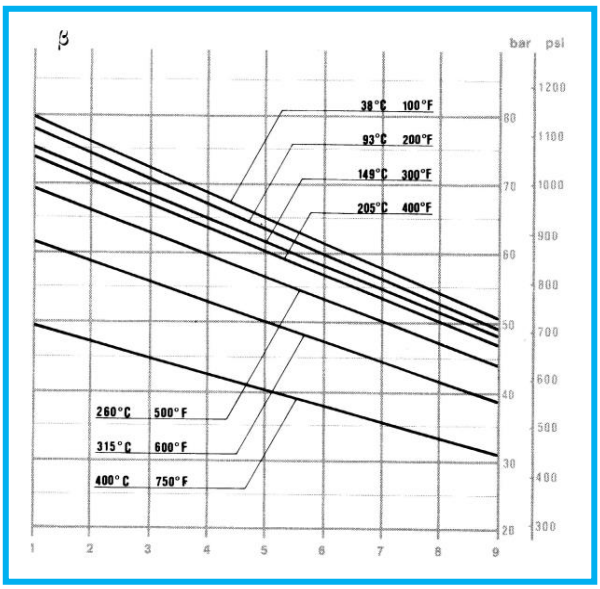

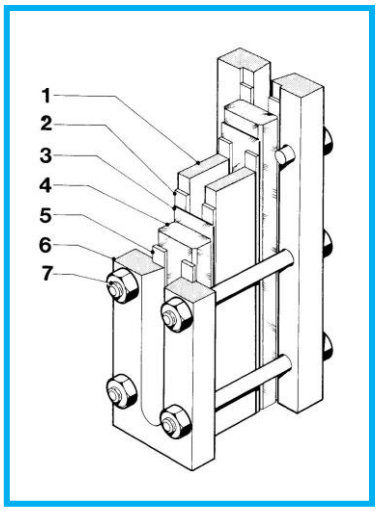

1-	Centre Piece
2-	Sealing Joint (Graphite)
3-	Mica Shield (where applicable)
4-	Transparent Glasses
5-	Cushion Joint (Graphite)
6-	Cover Plate
7-	Bolt with nut

Dimensions are in mm. We reserve the right to carry out any necessary modifications on materials & construction without notice.

BONETTI®

Transparent Level Gauges

Model : BT24
Shut-off & drain valve : G11
Pressure rating : PN40

Technical features :

- Connections between gauge and valves are made by end tubes and stuffing boxes.
- Inside passage through the gauge is 10mm
- Operating conditions and material schedules on page 3.
- BT24 gauges are fitted with transparent glasses type B.
- Standard connections to vessel are PN40 DN20 flanges and other ratings and sizes may be supplied on request.
- Bolting torque of BT24 is 50 Nm .

Sizes	Centre to centre distances	Length of Body	Visible Length	Glass Length	Weight
	CC	B	V	G	Kg
I	235	128	93	115	10,80
II	260	153	118	140	11,90
III	285	178	143	165	12,30
IV	310	203	168	190	12,90
V	340	233	198	220	13,90
VI	370	263	228	250	14,65
VII	400	293	258	280	15,60
VIII	440	333	298	320	16,70
IX	460	353	318	340	17,40
2xIV	515	408	373	190	18,90
2xV	575	468	433	220	20,85
2xVI	635	528	493	250	22,40
2xVII	695	588	553	280	24,50
2xVIII	775	668	633	320	26,70
2xIX	815	708	673	340	27,70
3xVI	900	793	758	250	30,30
3xVII	990	883	848	280	33,20
3xVIII	1110	1003	968	320	36,45
3xIX	1170	1063	1028	340	38,60
4xVII	1285	1178	1143	280	41,95
4xVIII	1445	1338	1303	320	46,30
4xIX	1525	1418	1383	340	49,20
5xVII	1580	1473	1438	280	50,75
5xVIII	1780	1673	1638	320	56,20
5xIX	1880	1773	1738	340	59,80
6xVIII	2115	2008	1973	320	66,10
6xIX	2235	2128	2093	340	70,40
7xIX	2590	2483	2448	340	80,85

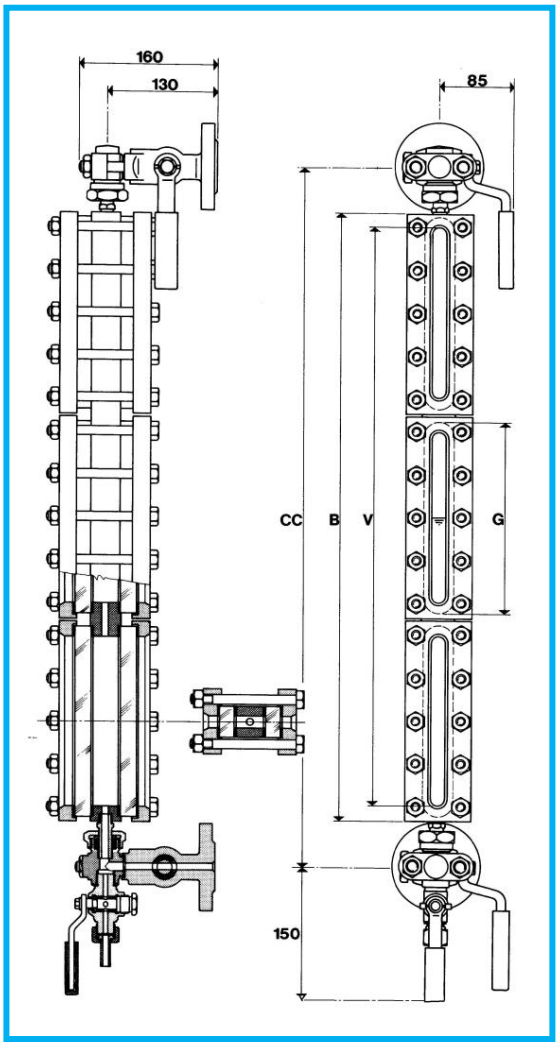

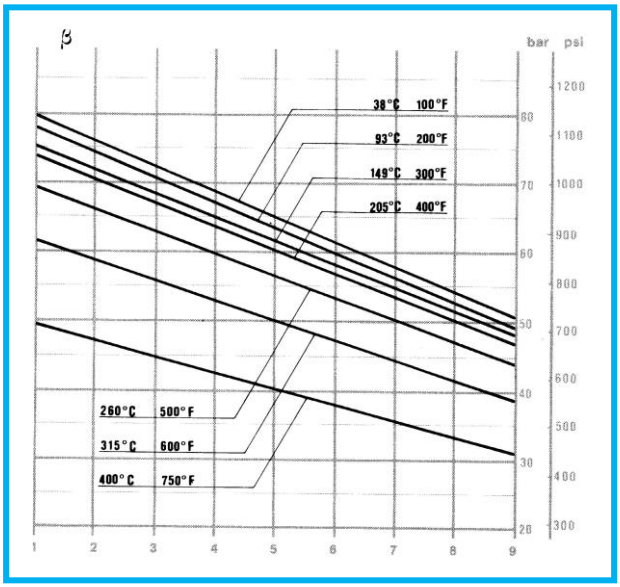

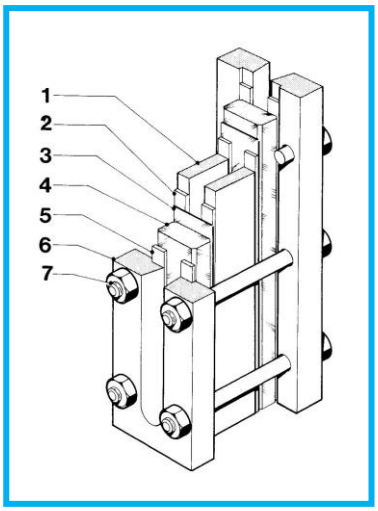

1-	Centre Piece
2-	Sealing Joint (Graphite)
3-	Mica Shield (where applicable)
4-	Transparent Glasses
5-	Cushion Joint (Graphite)
6-	Cover Plate
7-	Bolt with nut

Dimensions are in mm. We reserve the right to carry out any necessary modifications on materials & construction without notice.

BONETTI®

Gauge Valves

General information :
These are the classical cocks for level gauges having a cylindrical plug with soft tightening packing sleeve.
The advantages of this design are :
- circular through flow passage,
- very long life of body and plug since the elastic packing sleeve is interposed between this two pieces,
- no sensitivity to changes of temperature,
- no possible plug seizure,
- best performance at high temperature,
- possibility to restore tightness during service by compressing packing sleeve,
- complete interchangeability of worn pieces.

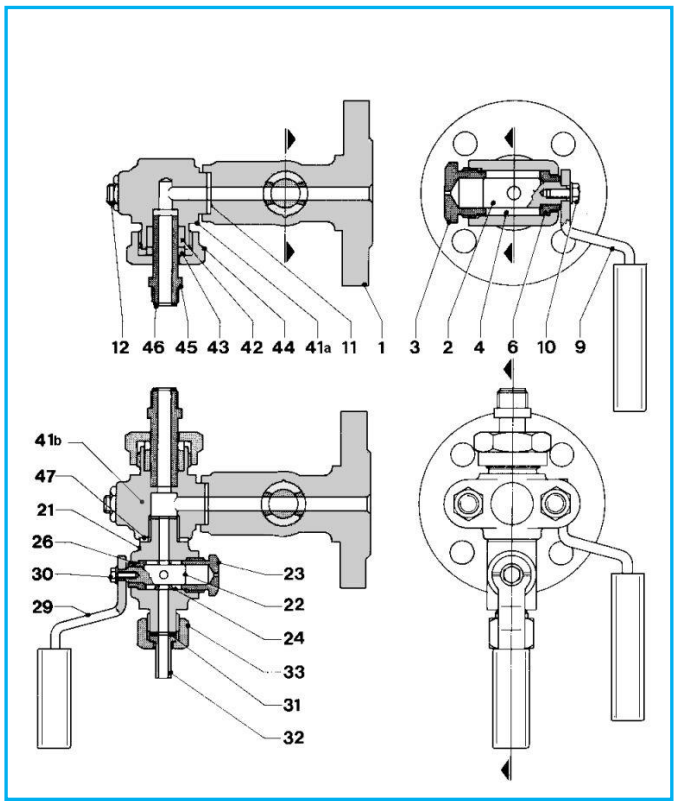

Part name	Material code 52
Top and bottom cock	
1-Body	ASTM A105 Forged steel
2-Plug	1.4301
3-Tightening nut	Galvanized steel
4-Packing sleeve with 2 eyelets, type M2.2	Graphite
6-Ring	Galvanized steel
9-Handle	Galvanized steel
10-Screw and washer	Galvanized steel
11-Head joint	Copper
12- Stud and nut	Galvanized steel

Offset Valves type : G11
Pressure rating : PN40 / ANSI 300

These set are suitable for :
-Type : G11 (connection to gauge by stuffing box)
ASME Class 300 and PN40

Handles and plug are made so that each handle face downward when the gauge is in service that is when shut-off (top and bottom) are open and drain cock is closed.
According to the right or the left position of the shut-off cocks handle, the set (and therefore the level gauge) is named right handed or left handed.

Centre to centre distance :
When these sets of cocks are chosen for the level gauge, the value of the minimum vessel C. to C. distance is given from the formula :
type G11: min. C. to C.= Length of body + 101mm

Part name	Material code 52
Drain cock	
21-Body	ASTM A105 Forged steel
22-Plug	1.4301
23-Tightening nut	Galvanized steel
24-Packing sleeve with 2 eyelets, type M1.2	Grafit
26-Ring	Galvanized steel
29-Handle	Galvanized steel
30- Screw and washer	Galvanized steel
31-Tailpipe joint	Copper
32-Tailpipe	Galvanized steel
33- Union nut	Galvanized steel

Part name	Material code 52
Top and bottom cock	
41a-Top connecting head	ASTM A105 Forged steel
41b- Bottom conencting head	ASTM A105 Forged steel
42-Packing ring (Ø16)	Graphite
43-Stuffing box ring	Galvanized steel
44-Stuffing box nut	Galvanized steel
45-End tube (Ø16)	1.4301
46-Tube joint ring	Graphite
47-Drain joint ring	Graphite

We reserve the right to carry out any necessary modifications on materials & construction without notice.

BONETTI®

Sleeve Packed Cock / Drain valve

Model : RM 1.415
Connection : Male screwed TS EN ISO 228-1
Pressure rating : PN160 (AISI 900)

Technical features :

- It is used as drain shut-off valve .
- Soft sealing is achieved by non-asbestos graphite packing sleeve between body and plug .
- It may be supplied in 3-way design for use as shut-off valve with pressure gauge .
- It is suitable for almost all fluids, up to 400 ^{0}C .
- Connections are male screwed acc. to DIN259, BSP2779 and UNI 338 and equipped with union nut and tailpipe.

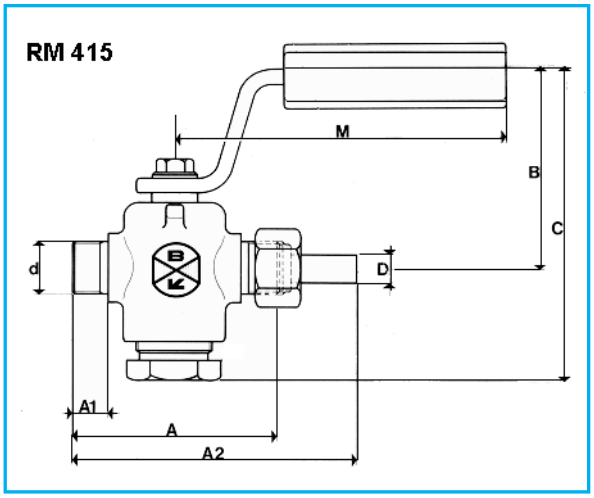

Type	DN			Dimensions								Material Schedules	Weight
	Ring type	Bore mm	Plug dia. mm	Thread d BSP	A1 mm	D mm	A mm	A2 mm	B mm	C mm	M mm		Approx. Kg
RM1.415	M1.2	5	12	½″	12	9	60	85	45	76	100	52,63,64	0,40
RM2.415	M2.2	8	18	½″	16	11	80	110	54	95	130	52,63,64	1,00

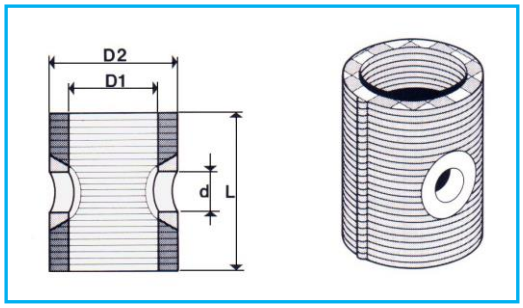

Type	Passage nominal bore		Dimensions		
	d mm	d inch	D1 mm	D2 mm	L mm
M1.2	6	1/4"	12	18	23
M2.2	8	5/16"	18	26	32

Max. operating temperature for continuous service 400^{0}C

BONETTI®

Sight Glasses for Level Gauges

Standard and Quality :
Glasses fitted in our level gauges and spare glasses comply with the following standards :
-DIN7081 -ÖNORM M7354 -MIL G18498B
-TGL7210 -OMV H2009 -Esso Eng.Spec.123
-BS3463 -JIS B8211 -S.O.D. Spec.123
Material is always borosilicate glass pre-stressed and optically tested. Pre-stressed , "hardened", "extra hard" and similar definitions are perfectly equivalent.
We never use "soda lime" glasses since they have quite insufficient features.
Special attention shall be paid to length, width, thickness and especially flatness tolerances. From the latter point of view Bonetti sight glasses have very strict tolerance values, definetly lower than most of the ones on the market. What above ensures less stress and longer life of glass and joints.

Reflex glasses

These glasses have one smooth face (external face) and the other face provided with moulded prismatic grooves (internal face).

Reflex glasses have following dimensions :

Size	Type A			Type B			Type A-BR13		
	L	B	S	L	B	S	L	B	S
I (1)	115	30	17	115	34	17	115	30	17
II (2)	140	30	17	140	34	17	140	30	17
III (3)	165	30	17	165	34	17	165	30	17
IV (4)	190	30	17	190	34	17	190	30	17
V (5)	220	30	17	220	34	17	220	30	17
VI (6)	250	30	17	250	34	17	250	30	17
VII (7)	280	30	17	280	34	17	280	30	17
VIII (8)	320	30	17	320	34	17	320	30	17
IX (9)	340	30	17	340	34	17	340	30	17

Transparent glasses

These glasses have both smooth faces.

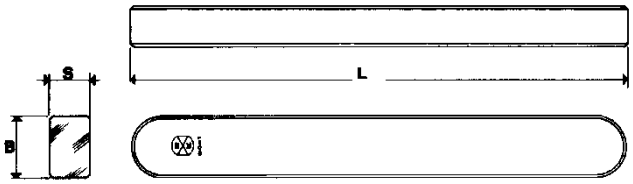

Transparent glasses have following dimensions :

Size	Type A			Type B			Type A-BR13		
	L	B	S	L	B	S	L	B	S
I (1)	115	30	17	115	34	17			
II (2)	140	30	17	140	34	17			
III (3)	165	30	17	165	34	17	163	27,6	16,8
IV (4)	190	30	17	190	34	17	188	27,6	16,8
V (5)	220	30	17	220	34	17	218	27,6	16,8
VI (6)	250	30	17	250	34	17	248	27,6	16,8
VII (7)	280	30	17	280	34	17	278	27,6	16,8
VIII (8)	320	30	17	320	34	17	318	27,6	16,8
IX (9)	340	30	17	340	34	17	338	27,6	16,8

Round transparent glasses

A special transparent glass is the round glass for application with high pressure (usually bicolour) level gauges. This glass is a small disc with very strict tolerances.

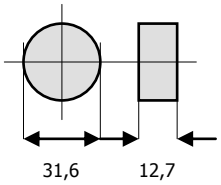

Joints for glasses

Each sight glass is usually supplied with 2 joints (1 sealing joint + 1 cushion joint).
Length and width of joint are the same as those of the respective glass. Standard thickness is 0,75mm

Protection for glasses

When glass protection against corrosive fluids is to be taken in consideration (inc. boiler water pressured over 35 bar), you must remember that only smooth surfaces can be shielded by smooth sheets having same length and width as sight glass.
Therefore :
-reflex glasses : only external face can be shielded by mica sheets or other materials against corrosive environmental agents,
-transparent glasses : both faces can be shielded by mica or transparent Kel-F sheets.
Protection of the internal glass face in contact with fluid is usually sufficient.
Mica sheets inside level gauges are always recommended for application with water steam :
Thickness of mica sheets is usually 0,15 to 0,20mm