WATER TEMPERATURE CONTROL SOLUTIONS

DIGITAL – THERMOSTATIC

Table of Contents

Water Temperature Control - Single Point of Use 4-5

Thermostatic

Model 215 5

Water Temperature Control - Groups of Fixtures 6-8

Thermostatic

Model 320 7
Model 425 8

Water Temperature Control - Emergency Fixtures 9-13

Thermostatic

Model Z358-20 10
Model Z358-40 12

Water Temperature Control - Recirculation Systems 14-34

The Brain® Digital Recirculation Valve

Model DRV25 15
Model DRV25R 16
Model DRV40 19
Model DRV40R 20
Model DRV50 24
Model DRV50R 25
Model DRV80 29
Model DRV80R 30

The Brain® Digital Mixing Centers

Model DMC25 Flex 17
Model DMC25-25 18
Model DMC40 Flex 21
Model DMC40 22
Model DMC40-40 23
Model DMC50 Flex 26
Model DMC50 27
Model DMC50-50 28
Model DMC80 Flex 31
Model DMC80 32
Model DMC80-80 33
Model DMC80-80-80 34

Connectivity 35

SAGE® Smart Hot Water System Monitoring & Documentation 36-37

Standards & Approvals 38

Designs, materials, weights and performance ratings are approximate and subject to change without notice. Visit **armstrong**international.com for up-to-date information.

Armstrong Hot Water Group, 221 Armstrong Blvd., Three Rivers, MI 49093 – USA Phone: 269-279-3602, Fax: 269-279-3130
armstronginternational.com

Water Temperature Control - Single Point of Use

Thermostatic

Water Temperature Control - Single Point of Use - Thermostatic, features the Model 215 thermostatic mixing valve which is designed specifically for installation at or near the final point of use.

Model 215 has been designed to offer accurate temperature control in installations where there are diverse flow requirements between .5 and 11 gpm (1.9 and 41.6 lpm).

Sizing

To size a mixing valve for single open outlet applications, simply match the required flow rate with the available maintained inlet water pressure. Correlate with required minimum flow rate and make a selection.

Thermostatic Mixing Valves (GPM and PSIG)

Model 215	Pressure Drop (PSIG)										Min. Flow	C_v
	5	10	15	20	25	30	35	40	45	50		
GPM	4	5	7	8	9	9	10	11	11	12	.5	1.7

Thermostatic Mixing Valves (LPM and BARG)

Model 215	Pressure Drop (BARG)										Min. Flow	C_v
	0.3	0.7	1.0	1.4	1.7	2.1	2.4	2.8	3.1	3.4		
LPM	15.1	18.9	26.5	30.3	34.1	34.1	37.9	41.6	41.6	45.4	1.9	1.7

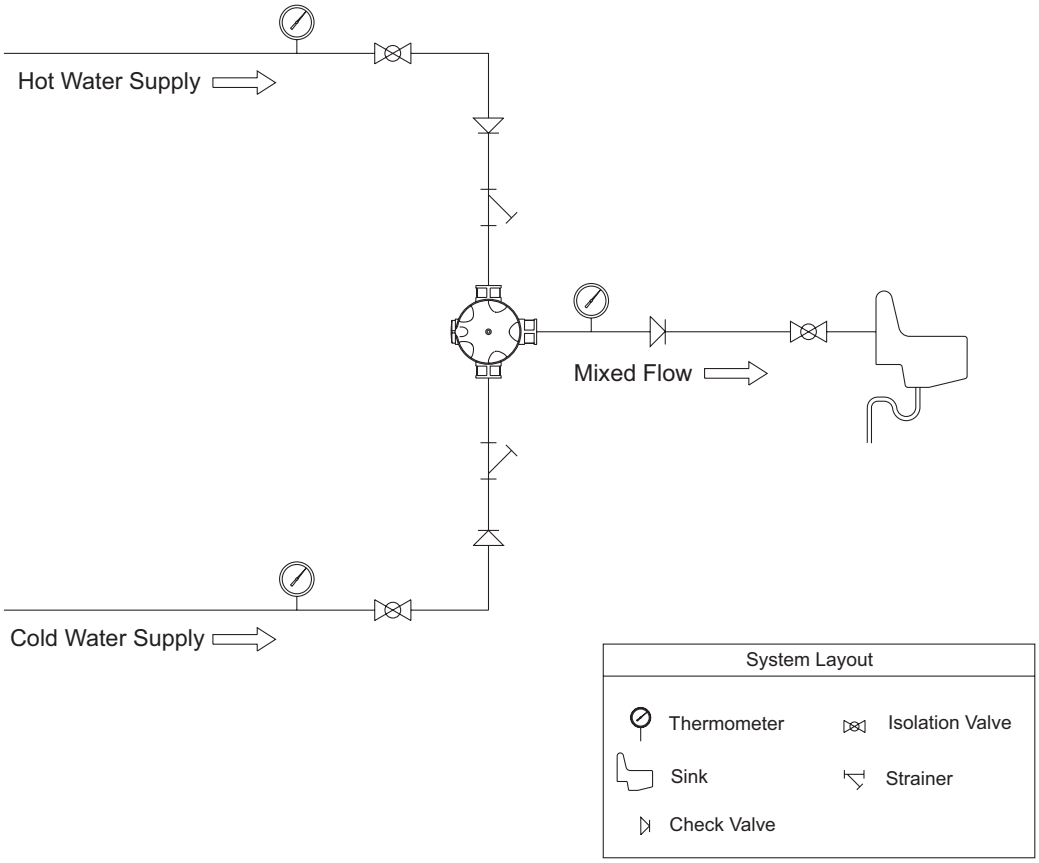

Designs, materials, weights and performance ratings are approximate and subject to change without notice. Visit **armstrong**international.com for up-to-date information.

Armstrong Hot Water Group, 221 Armstrong Blvd., Three Rivers, MI 49093 – USA Phone: 269-279-3602, Fax: 269-279-3130
armstronginternational.com

Thermostatic

Model 215

Thermostatic Mixing Valve of “sealed for life” replaceable cartridge construction. Compact design is ideally suited for use at or near the final point of use to deliver a pre designated mixed water temperature to either a single or a small “group” of lavatories.

Complete operating mechanism is enclosed in a durable disposable polymer cartridge for ease of maintenance. Powerful internal movement of the hot and cold water proportioning mechanism resists mineral deposition.

Capable of close temperature control at diverse flow rates between .5 and 11 gpm (1.9 and 41.6 lpm). Unit is supplied as standard with a tamperproof single temperature “locking” shroud and variable temperature control trim set.*

* Use of the trim set allows for full temperature control to within 5°F (2°C) of either inlet supply along with an integral maximum temperature limit stop and single temperature locking option.

Operational Specifications

- Typical outlet temperature control +/-2°F
- Adjustable maximum temperature limit stop
- Adjustable single temperature locking option
- Thermal shutdown mode upon inlet supply failure

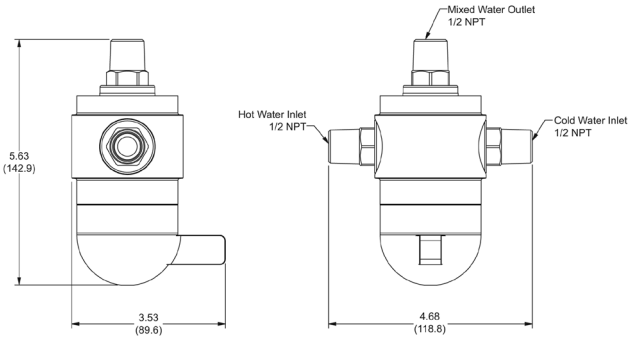

Technical Specifications

- 1/2” NPT inlets and 1/2” NPT outlet
- Chrome plated brass/stainless alloy/polymer construction
- Lead Free compliant
- Operating pressures
  - Maximum: 150 psig (10 barg)
  - Minimum: 10 psig (.7 barg)
- Integral inlet check valves and strainers
- ASSE 1069 Certified
- ASSE 1070 Certified
- Shipping weight 10 lbs (4.5 kg)

For a submittal, refer to D58506.

Thermostatic Mixing Valves (GPM and PSIG)

Model 215	Pressure Drop (PSIG)										Min. Flow	C_v
	5	10	15	20	25	30	35	40	45	50		
GPM	4	5	7	8	9	9	10	11	11	12	.5	1.7

Thermostatic Mixing Valves (LPM and BARG)

Model 215	Pressure Drop (BARG)										Min. Flow	C_v
	0.3	0.7	1.0	1.4	1.7	2.1	2.4	2.8	3.1	3.4		
LPM	15.1	18.9	26.5	30.3	34.1	34.1	37.9	41.6	41.6	45.4	1.9	1.7

Designs, materials, weights and performance ratings are approximate and subject to change without notice. Visit **armstrong**international.com for up-to-date information.

Armstrong Hot Water Group, 221 Armstrong Blvd., Three Rivers, MI 49093 – USA Phone: 269-279-3602, Fax: 269-279-3130
armstronginternational.com

Water Temperature Control - Groups of Fixtures

Thermostatic

Water Temperature Control - Groups of Fixtures - Thermostatic features two Thermostatic Mixing Valves and derivative assemblies designed specifically for use in non-return “dead leg” applications.

The range has been designed to offer accurate temperature control in installations where there are diverse flow requirements.

Sizing

When sizing for zoned or group control applications, ensure that there is sufficient residual pressure (20 psi minimum is suggested) after the mixing valve to satisfactorily operate the outlet fixtures at realistic maximum simultaneous demand.

Thermostatic Mixing Valves (GPM and PSIG)

Model (GPM)	Pressure Drop (PSIG)										Min. Flow	C_v
	5	10	15	20	25	30	35	40	45	50		
320	8	11	13	15	17	19	20	22	23	24	1.0	3.4
425	15	22	27	31	35	38	41	44	46	49	2.0	6.9

Thermostatic Mixing Valves (LPM and BARG)

Model (LPM)	Pressure Drop (BARG)										Min. Flow	C_v
	0.3	0.7	1.0	1.4	1.7	2.1	2.4	2.8	3.1	3.4		
320	30.3	41.6	49.2	56.8	64.4	71.9	75.7	83.3	87.1	90.8	3.8	3.4
425	56.8	83.3	102.2	117.3	132.5	143.8	155.2	166.6	174.1	185.5	7.6	6.9

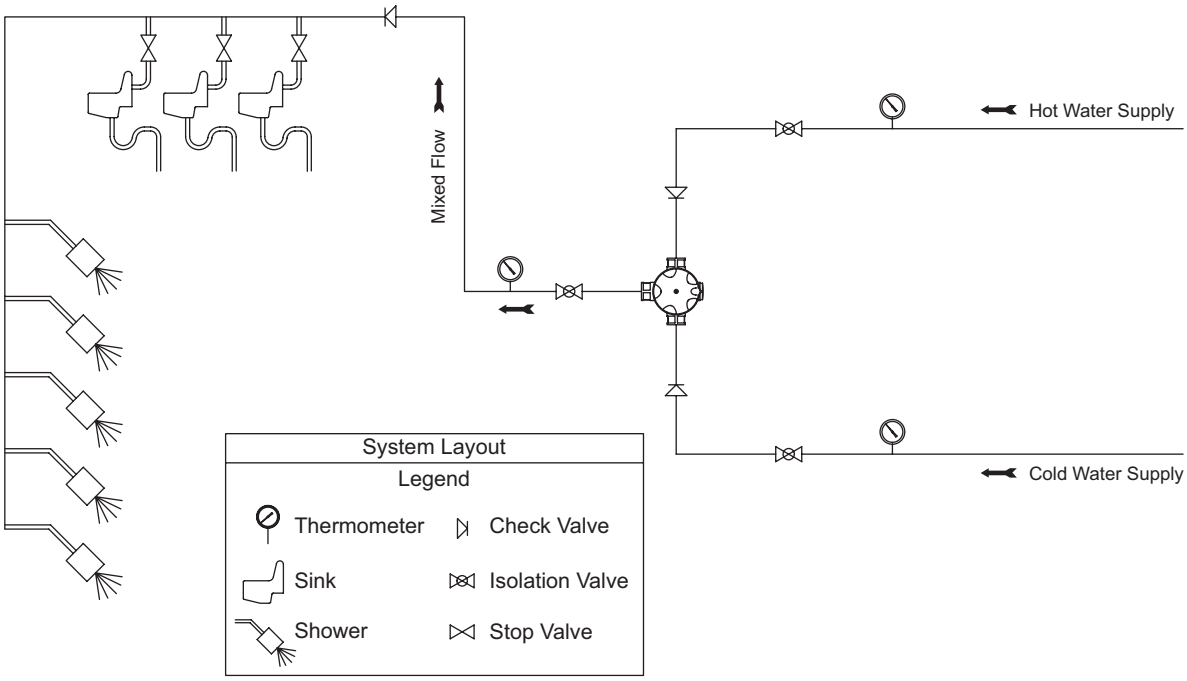

Designs, materials, weights and performance ratings are approximate and subject to change without notice. Visit **armstrong**international.com for up-to-date information.

Armstrong Hot Water Group, 221 Armstrong Blvd., Three Rivers, MI 49093 – USA Phone: 269-279-3602, Fax: 269-279-3130
armstronginternational.com

Thermostatic

Model 320

Thermostatic Mixing Valve of “sealed for life” disposable cartridge construction. Compact design with top and/or bottom blended water outlet makes the Model 320 ideal for recessed enclosure, plumbing chase and utility/mechanical room installation.

Complete operating mechanism of valve is enclosed in a durable polymer cartridge for ease of field maintenance. Powerful internal mechanism and non metallic wetted parts resist mineral deposition.

Capable of close temperature control at diverse flow rates between 1 gpm (3.8 lpm) and 24 gpm (91 lpm). Able to blend within 5°F (2°C) of either inlet supply due to “low seepage” across internal proportioning mechanism.

Operational Specifications

- Dual thermostatic elements provide redundancy in the event of individual thermostat failure
- Typical outlet temperature control +/-2°F
- Adjustable maximum temperature limit stop
- Adjustable single temperature lockout
- Thermal shutdown mode upon inlet supply failure

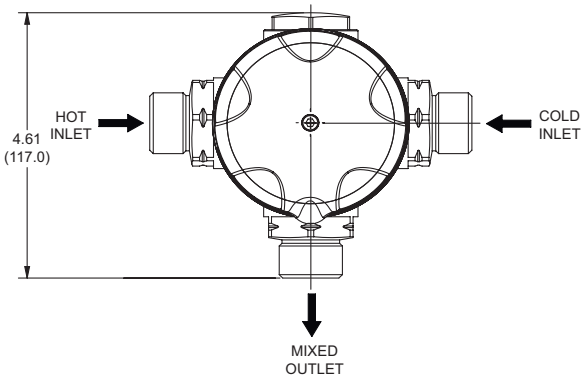

Technical Specifications

- 3/4” MNPT inlets and 3/4” MNPT outlet
- Chrome-plated brass/polymer construction
- Lead Free compliant
- Operating pressures
  - Maximum: 150 psig (10 barg)
  - Minimum: 10 psig (.7 barg)
- Integral inlet check valves and strainers
- ASSE 1017 and CSA B125 certified
- Shipping weight 10 lbs (4.5 kg)

For a submittal drawing, refer to D81520.

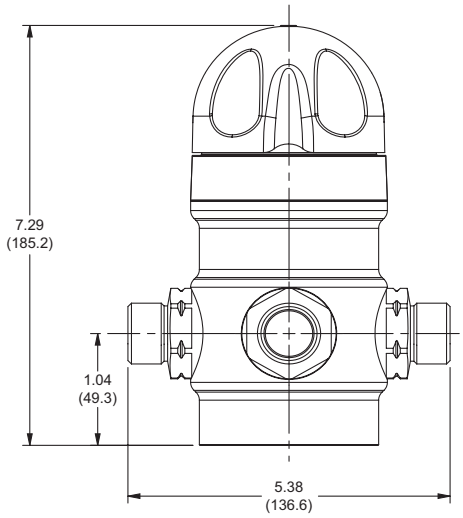

Thermostatic Mixing Valves (GPM and PSIG)

Model 320	Pressure Drop (PSIG)										Min. Flow	C_v
	5	10	15	20	25	30	35	40	45	50		
GPM	8	11	13	15	17	19	20	22	23	24	1.0	3.4

Thermostatic Mixing Valves (LPM and BARG)

Model 320	Pressure Drop (BARG)										Min. Flow	C_v
	0.3	0.7	1.0	1.4	1.7	2.1	2.4	2.8	3.1	3.4		
LPM	30.3	41.6	49.2	56.8	64.4	71.9	75.7	83.3	87.1	90.8	3.8	3.4

Designs, materials, weights and performance ratings are approximate and subject to change without notice. Visit **armstrong**international.com for up-to-date information.

Armstrong Hot Water Group, 221 Armstrong Blvd., Three Rivers, MI 49093 – USA Phone: 269-279-3602, Fax: 269-279-3130
armstronginternational.com

Water Temperature Control - Groups of Fixtures

Thermostatic

Model 425

The model 425 Thermostatic Mixing Valve is for institutional group fixture water temperature control. Compact design with top and/or bottom blended water outlet makes Model 425 ideal for recessed enclosure, plumbing chase and utility/mechanical room installation.

Powerful internal mechanism and stainless steel operating mechanism resist mineral deposition.

Capable of close temperature control at diverse flow rates between 2 gpm (7.5 lpm) and 49 gpm (185 lpm). Able to blend to within 5°F (2°C) of either inlet supply due to “low seepage” across internal proportioning mechanism.

Operational Specifications

- Dual thermostatic elements provide redundancy in the event of individual thermostat failure.
- Typical outlet temperature control +/-2°F
- Adjustable maximum temperature limit stop
- Adjustable single temperature lockout
- Thermal shutdown mode upon inlet supply failure

Technical Specifications

- 1-1/4” NPT inlets and 1-1/4” outlet
- Chrome plated brass/stainless steel
- Lead Free compliant
- Operating pressures
  - Maximum: 150 psig (10 barg)
  - Minimum: 10 psig (.7 barg)
- Integral inlet check valves and strainers
- ASSE 1017 and CSA B125 certified
- Shipping weight 18 lbs (8.1 kg)

For a submittal drawing, refer to D73767.

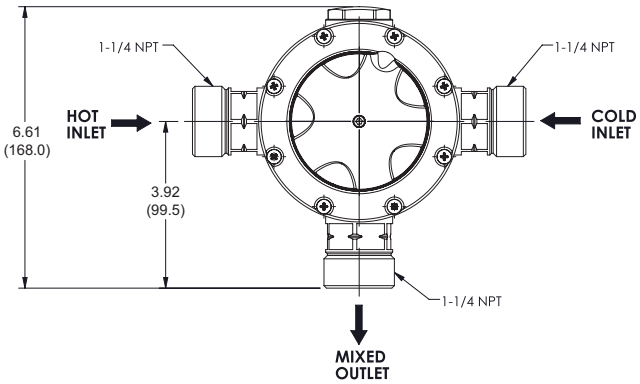

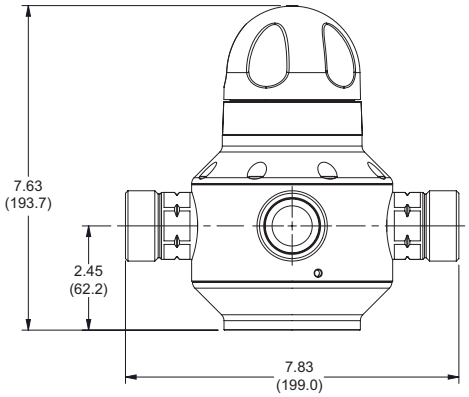

Thermostatic Mixing Valves (GPM and PSIG)												
Model 425	Pressure Drop (PSI)										Min. Flow	C_V
	5	10	15	20	25	30	35	40	45	50		
GPM	15	22	27	31	35	38	41	44	46	49	2.0	6.9

Thermostatic Mixing Valves (LPM and BARG)												
Model 425	Pressure Drop (BARG)										Min. Flow	C_V
	0.3	0.7	1.0	1.4	1.7	2.1	2.4	2.8	3.1	3.4		
LPM	56.8	83.3	102.2	117.3	132.5	143.8	155.2	166.6	174.1	185.5	7.6	6.9

Designs, materials, weights and performance ratings are approximate and subject to change without notice. Visit **armstrong**international.com for up-to-date information.

Armstrong Hot Water Group, 221 Armstrong Blvd., Three Rivers, MI 49093 – USA Phone: 269-279-3602, Fax: 269-279-3130
armstronginternational.com

Thermostatic

Point of Use

Z358-20 and Z358-40 Thermostatic Mixing Valves are suitable

for installation at or near a point of use for direct tepid water supply to an emergency fixture or grouping of fixtures. Groups of fixtures must meet the valve's flow capacity requirements if there is a potential for simultaneous operation.

Z358 series has been designed specifically to provide temperature controlled water to emergency fixtures as detailed in ANSI Z358.1-2014.

The 2014 version of the standard states that the water temperature delivered by emergency equipment should be 'tepid ' Tepid is defined to be between 60°F (16°C) and 100°F (38°C) However, in circumstances where a chemical reaction is accelerated by the flushing water temperature, a facilities safety/health advisor should be consulted to determine the optimum water temperature setpoint for each application.

For recirculated tepid loops serving emergency fixtures, Armstrong suggests that ONLY Digital Recirculation Valves should be considered. Please consult your Armstrong representative or Armstrong directly.

Central Recirculation System Control

Recirculated, tepid loops serving emergency fixtures are fundamentally different in application from standard institutional hot water recirculating systems . The limited system draw-off requirement of the emergency fixture circuit portends limited system audit capability and a subsequent underlying system management concern.

Closed loops for emergency fixtures require infrequent but often a large and sudden volume of water that must be in the correct temperature range every time . Without some level of manual or automated system monitoring and correction, along with an aggressive system maintenance protocol, tepid loops present a challenge.

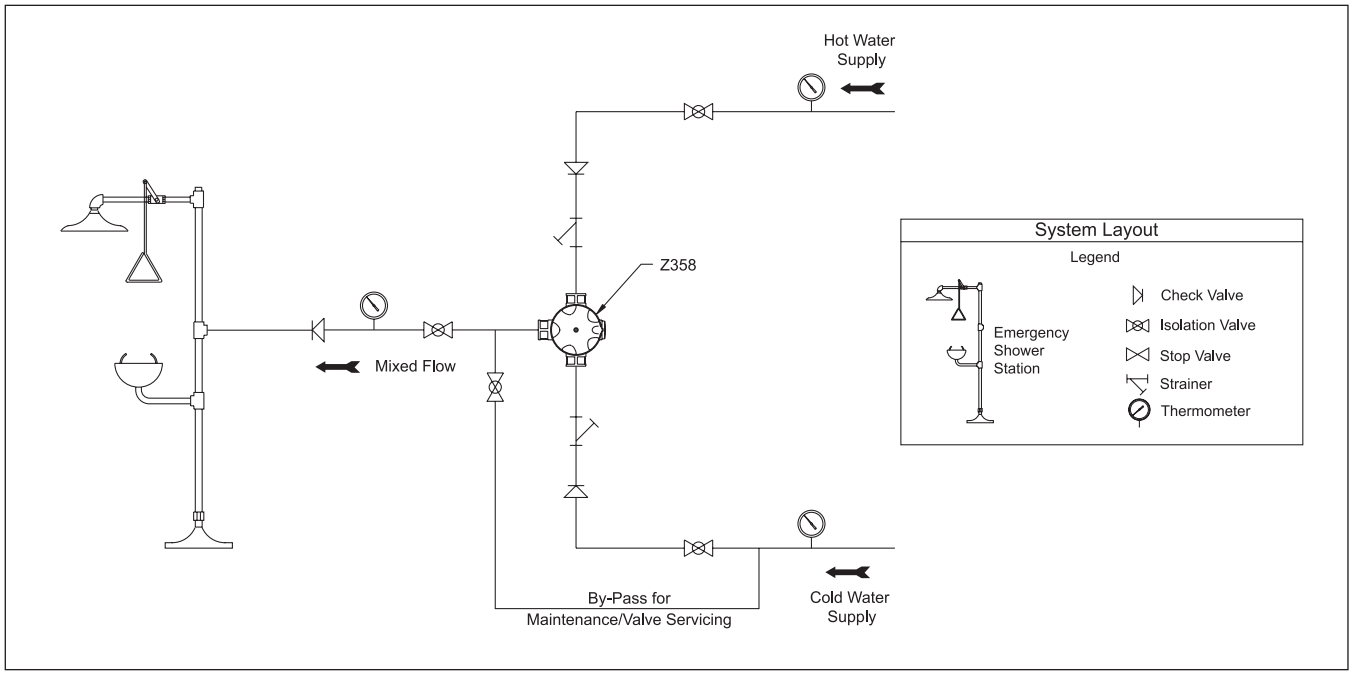

Armstrong Hot Water Group, 221 Armstrong Blvd., Three Rivers, MI 49093 – USA Phone: 269-279-3602, Fax: 269-279-3130
armstronginternational.com

Thermostatic

Z358-20

Z358-20 has been designed specifically to provide temperature controlled water to emergency fixtures as detailed in ANSI Z358.1-2014.

Z358-20 is a Thermostatic Mixing Valve of “sealed for life” disposable cartridge construction. Compact design and top or bottom blended water outlet make Z358-20 ideal for OEM, new construction and upgrade/retrofit installations.

For Emergency Drench Showers. Z358-20 will pass ANSI specified minimum of 20 gpm (76 lpm) (actual 23 gpm (87 lpm)) and will flow a minimum of 10 gpm (38 lpm) from direct cold water supply in hot failure mode at 40 psi (2.7 bar) maintained equal inlet supply pressure.

For Emergency Eye Wash Stations or Emergency Eye/Face Wash Stations. For single or multiple fixture installation, Z358-20 will control accurately at flow rates from 20 gpm (76 lpm) to below 1 gpm (3.8 lpm).

In flow applications between 20 gpm (76 lpm) and 10 gpm (38 lpm), Z358-20 will pass approximately 50% of original flow setting in hot failure mode.

In flow applications between 10 gpm (38 lpm) and 5 gpm (19 lpm), Z358-20 will pass approximately 80% of original flow setting in hot failure mode.

In flow applications below 5 gpm (19 lpm), Z358-20 will pass approximately 95% of original flow setting in hot failure mode.

Operational Specifications

1. Site Adjustable—Mechanical maximum-temperature limit stop and single-temperature locking features as a function of the temperature control handle design.
2. Thermal shutdown feature is designed to protect user from unsafe water temperatures or hot water/chemical reaction should cold supply be interrupted during use.
3. Unique constant cold water flow design ensures that in the event of a hot supply failure the Z358-20 will allow cold water to flow to fixture.
4. Unique constant cold water flow feature allows the inlet hot water supply to be set within a prescribed range, thus limiting the potential outlet temperature to a safe maximum in the event of misadjustment, unauthorized tampering or thermostat failure. This feature presumes that the correct initial commissioning was performed and that the cold water supply has not been interrupted.

Technical Specifications

- 3/4” (20 mm) NPT inlets and 3/4” (20 mm) NPT outlet(s)
- Chrome-plated brass/polymer construction with bright “Safety Yellow” control handle.
- Lead Free compliant
- Operating pressures must be nominally equal
  - Maximum: 100 psig (6.9 barg)*
  - Minimum: 40 psig (2.7 barg) drench showers
  - 20 psig (1.4 barg) eye wash
- Integral thermometer
- Integral replaceable cartridge-type inlet check valves
- Dual thermostatic elements
- Integral replaceable inlet strainers
- 10 gpm (38 lpm) constant cold water flow in hot failure mode to open outlet at 40 psig (2.7 barg) pressure drop
- Shipping weight 10 lb (4.5 kg)

*High water pressures may deliver a volume and spray force that are injurious to the user. Check with fixture manufacturer or regulate water pressures within acceptable range.

Table 1.
Safe Maximum Inlet Hot Water Supply Temperature
Refer to this table to correlate inlet hot water supply temperature with anticipated seasonal ground water temperatures (use best case/warmest scenario).
For details, reference Safety Bullet #4 at left.

Table 1

Inlet Hot Water Temp. °F (C°)	Cold Water Temperature °F (C°)				
	33 (1)	40 (4)	50 (10)	60 (16)	70 (21)
120 (49)	80 (27)	84 (29)	88 (31)	93 (34)	97 (36)
130 (54)	86 (30)	89 (32)	94 (34)	98 (37)	103 (39)
140 (60)	91 (33)	95 (35)	99 (37)	104 (40)	108 (42)
150 (66)	96 (36)	100 (38)	105 (41)	109 (43)	114 (46)
160 (71)	102 (39)	106 (41)	110 (43)	115 (46)	119 (48)
175 (79)	110 (43)	114 (46)	118 (48)	123 (51)	127 (53)
185 (85)	116 (47)	119 (48)	124 (51)	128 (53)	133 (56)

NOTE: Shaded area indicates potential user risk.

Table 2.
Minimum Inlet Hot Water Supply Temperature
Z358-20 will require a minimum inlet hot water supply temperature, which must be correlated with the anticipated seasonal inlet cold water supply temperature (use worst case/coldest scenario) as per Table 2 below.

Table 2

Blend Temp °F (C°)	Cold Water Temperature °F				
	33 (1)	40 (4)	50 (10)	60 (16)	70 (21)
80 (27)	120 (49)	113 (45)	105 (41)	97 (36)	88 (31)
85 (29)	129 (54)	122 (50)	114 (46)	106 (41)	97 (36)
90 (32)	138 (59)	132 (56)	123 (51)	115 (46)	107 (42)
95 (35)	147 (64)	141 (61)	132 (56)	124 (51)	116 (47)

For expanded versions of Tables 1 and 2, consult factory or product installation and maintenance manual.

Designs, materials, weights and performance ratings are approximate and subject to change without notice. Visit **armstrong**international.com for up-to-date information.

Armstrong Hot Water Group, 221 Armstrong Blvd., Three Rivers, MI 49093 – USA Phone: 269-279-3602, Fax: 269-279-3130
armstronginternational.com

Water Temperature Control - Emergency Fixtures

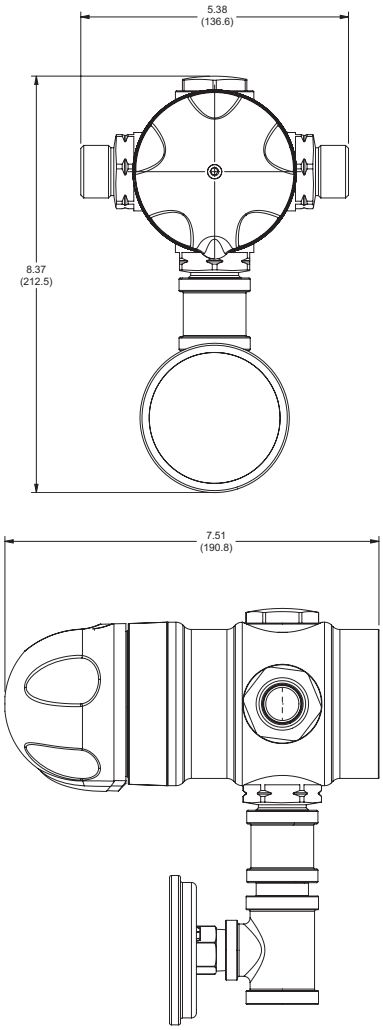

For a submittal, refer to D81616.

Thermostatic Mixing Valves (GPM and PSIG)

Model (GPM)	Pressure Drop (PSIG)										Min. Flow
	5	10	15	20	25	30	35	40	45	50	
Z358-20	8	11	13	15	17	19	20	22	23	24	1.0

Thermostatic Mixing Valves (LPM and BARG)

Model (LPM)	Pressure Drop (BARG)										Min. Flow
	0.3	0.7	1.0	1.4	1.7	2.1	2.4	2.8	3.1	3.4	
Z358-20	30.3	41.6	49.2	56.8	64.4	71.9	75.7	83.3	87.1	90.8	3.8

Operating Specifications	
Maximum Recommended Hot Water Supply Temperature	130°F (54°C)
Minimum Cold Water Supply Temperature	33°F (1°C)
Optimum Inlet to Outlet Temperature Differential	Refer to Table 2
Minimum Flow Rate	1 gpm (3.8 lpm)
Maximum Inlet Supply Pressure (supplies must be nominally equal)	100 psi (6.9 bar)
Minimum Inlet Supply Pressure	40 psig (2.7 barg) Drench Shower 20 psig (1.4 barg) Eye Wash

*High water pressure may deliver a volume and spray force that are injurious to the user. Check with fixture manufacturer or regulate water pressures within acceptable range.

Designs, materials, weights and performance ratings are approximate and subject to change without notice. Visit **armstrong**international.com for up-to-date information.

Armstrong Hot Water Group, 221 Armstrong Blvd., Three Rivers, MI 49093 – USA Phone: 269-279-3602, Fax: 269-279-3130
armstronginternational.com

Thermostatic

Z358-40

Z358-40 has been designed specifically to provide temperature controlled water to emergency fixtures as detailed in ANSI Z358.1-2014.

Z358-40 is a Thermostatic Mixing Valve designed specifically to deliver tepid water to emergency fixtures. Compact design and top or bottom blended water outlet makes Z358-40 ideal for OEM, new construction and upgrade/retrofit installations.

For Emergency Drench Showers. Z358-40 will pass ANSI specified minimum of 20 gpm (75.7 lpm)—actual 46 gpm (147 lpm)—and will flow a minimum of 15 gpm (57 lpm) from direct cold water supply in hot failure mode at 45 psi (3 bar) pressure drop.

For Emergency Eye Wash Stations or Emergency Eye/Face Wash Stations. For single or multiple fixture installation, Z358-40 will control accurately at flow rates from 40 gpm (151 lpm) to below 2 gpm (7 lpm)—actual 46 gpm @ 45 psi pressure drop.

In 40 gpm (151 lpm) flow applications, Z358-40 will pass approximately 40% of original flow setting in hot failure mode.

In 30 gpm (114 lpm) flow applications, Z358-40 will pass approximately 50% of original flow setting in hot failure mode.

In 15 gpm (57 lpm) flow applications, Z358-40 will pass approximately 75% of original flow setting in hot failure mode.

Operational Specifications

1. Site Adjustable—Mechanical maximum temperature limit stop and single temperature locking features as functions of the temperature control handle design.
2. Thermal shutdown feature is designed to protect user from unsafe water temperatures or hot water/chemical reaction should cold supply be interrupted during use.
3. Unique constant cold water flow design ensures that in the event of a hot supply failure the Z358-40 will allow cold water to flow to fixture.
4. Unique constant cold water flow feature allows the inlet hot water supply to be set within a prescribed range, thus limiting the potential outlet temperature to a safe maximum in the event of misadjustment, unauthorized tampering or thermostat failure. This feature presumes that the correct initial commissioning was performed and that the cold water supply has not been interrupted.

Technical Specifications

- 1-1/4” (32 mm) NPT inlets and 1-1/4” (32 mm) NPT outlet(s)
- Chrome-plated brass/polymer construction with bright “Safety Yellow” control handle.
- Lead Free compliant
- Operating pressures must be nominally equal
  Maximum: 100 psgi (6.9 barg)*
  Minimum: 40 psig (2.7 barg) drench showers
  20 psig (1.4 barg) eye wash
- Maximum recommended pressure drop 75 psig (5 barg)
- Maximum recommended outlet flow 53 gpm (200 lpm)
- Integral thermometer
- Integral replaceable cartridge-type inlet check valves
- Integral replaceable inlet strainers
- Dual thermostatic elements
- 15 gpm (57 lpm) constant cold water flow in hot failure mode to open outlet at 45 psig (3 barg) pressure drop
- Shipping weight 18 lb (8 kg)

*High water pressures may deliver a volume and spray force that are injurious to the user. Check with fixture manufacturer or regulate water pressures within acceptable range.

Table 1.
Safe Maximum Inlet Hot Water Supply Temperature
Refer to Table 1 below to correlate inlet hot water supply temperature with anticipated seasonal ground water temperatures (use best case/warmest scenario). For details, reference Safety benefit Bullet #4 at left.

Table 1

Inlet Hot Water Temp. °F (C°)	Cold Water Temperature °F (C°)				
	33 (1)	40 (4)	50 (10)	60 (16)	70 (21)
120 (49)	80 (27)	84 (29)	88 (31)	93 (34)	97 (36)
130 (54)	86 (30)	89 (32)	94 (34)	98 (37)	103 (39)
140 (60)	91 (33)	95 (35)	99 (37)	104 (40)	108 (42)
150 (66)	96 (36)	100 (38)	105 (41)	109 (43)	114 (46)
160 (71)	102 (39)	106 (41)	110 (43)	115 (46)	119 (48)
175 (79)	110 (43)	114 (46)	118 (48)	123 (51)	127 (53)
185 (85)	116 (47)	119 (48)	124 (51)	128 (53)	133 (56)

Table 2.
Minimum Inlet Hot Water Supply Temperature
Z358-40 will require a minimum inlet hot water supply temperature, which must be correlated with the anticipated seasonal inlet cold water supply temperature (use worst case/coldest scenario) as per Table 2 below.

Table 2

Blend Temp °F (C°)	Cold Water Temperature °F				
	33 (1)	40 (4)	50 (10)	60 (16)	70 (21)
80 (27)	120 (49)	113 (45)	105 (41)	97 (36)	88 (31)
85 (29)	129 (54)	122 (50)	114 (46)	106 (41)	97 (36)
90 (32)	138 (59)	132 (56)	123 (51)	115 (46)	107 (42)
95 (35)	147 (64)	141 (61)	132 (56)	124 (51)	116 (47)

For expanded versions of Tables 1 and 2, consult factory or product installation and maintenance manual.

Designs, materials, weights and performance ratings are approximate and subject to change without notice. Visit **armstrong**international.com for up-to-date information.

Armstrong Hot Water Group, 221 Armstrong Blvd., Three Rivers, MI 49093 – USA Phone: 269-279-3602, Fax: 269-279-3130
armstronginternational.com

Water Temperature Control - Emergency Fixtures

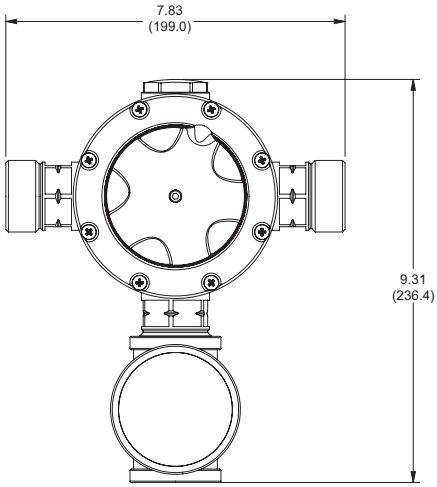

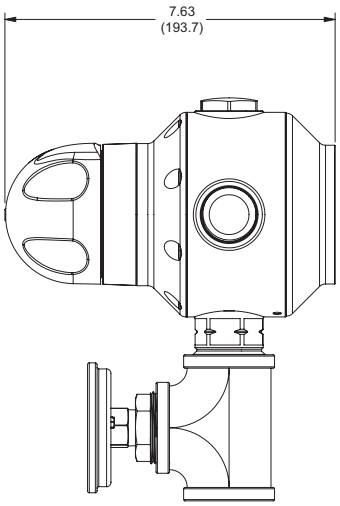

For a submittal drawing, refer to D77388.

Thermostatic Mixing Valves (GPM and PSIG)

Model (GPM)	Pressure Drop (PSIG)										Min. Flow
	5	10	15	20	25	30	35	40	45	50	
Z358-40	15	22	27	31	35	38	41	44	46	49	2.0

Thermostatic Mixing Valves (LPM and BARG)

Model (LPM)	Pressure Drop (BARG)										Min. Flow
	0.3	0.7	1.0	1.4	1.7	2.1	2.4	2.8	3.1	3.4	
Z358-40	56.8	83.3	102.2	117.3	132.5	143.8	155.2	166.6	174.1	185.5	7.6

Operating Specifications	
Maximum Recommended Hot Water Supply Temperature	130°F (54°C)
Minimum Cold Water Supply Temperature	33°F (1°C)
Optimum Inlet to Outlet Temperature Differential	Refer to Table 2
Minimum Flow Rate	1 gpm (3.8 lpm)
Maximum Inlet Supply Pressure (supplies must be nominally equal)	100 psi (6.9 bar)
Minimum Inlet Supply Pressure	40 psi (2.7 bar) Drench Shower 20 psi (1.4 bar) Eye Wash

*High water pressure may deliver a volume and spray force that are injurious to the user. Check with fixture manufacturer or regulate water pressures within acceptable range.

Designs, materials, weights and performance ratings are approximate and subject to change without notice. Visit **armstrong**international.com for up-to-date information.

Armstrong Hot Water Group, 221 Armstrong Blvd., Three Rivers, MI 49093 – USA Phone: 269-279-3602, Fax: 269-279-3130
armstronginternational.com

Digital

Water Temperature Control - Digital features Digital Recirculation Valves (DRV) and Digital Mixing Centers (DMC) specifically designed for use in a continuously pumped recirculating hot water system.

Options

The Brain® - Digital Recirculation Valve

Model DRV25 is a Digital Recirculation Valve (DRV) designed for systems which experience diverse draw-off between 0 - 19 GPM* and is provided with 1 ” connections.

Model DRV40 is a Digital Recirculation Valve (DRV) designed for systems which experience diverse draw-off between 0 - 41 GPM* and is provided with 1 5” connections.

Model DRV50 is a Digital Recirculation Valve (DRV) designed for systems which experience diverse draw-off between 0 - 73 GPM* DRV50 is a model DRV80 provided with bushed down 2” connections.

Model DRV80 is a Digital Recirculation Valve (DRV) designed for systems which experience diverse draw-off between 0 - 165 GPM* and is provided with 3” connections.

The Brain® - Digital Recirculation Valve with Recirculation Manifold

Model DRV25R – As above with integral recirculation system return manifold assembly with 1” connections.

Model DRV40R – As above with integral recirculation system return manifold assembly with 1.5” connections.

Model DRV50R – As above with integral recirculation system return manifold assembly with 2” connections.

Model DRV80R – As above with integral recirculation system return manifold assembly with 3” connections.

The Brain® - Digital Mixing Centers (DMC) Flex

Model DMC25 Flex is a DRV25 pre-piped with isolation valves, strainers, check valves and a recirculation manifold with unistrut supports. DMC25 Flex is designed for systems which experience diverse draw-off between 0 - 19 GPM* and is provided with 1” connections.

Model DMC40 Flex is a DRV40 pre-piped with isolation valves, strainers, check valves and a recirculation manifold with unistrut supports. DMC40 Flex is designed for systems which experience diverse draw-off between 0 - 41 GPM* and is provided with 1.5” connections.

Model DMC50 Flex is a DRV50 pre-piped with isolation valves, strainers, check valves and a recirculation manifold with unistrut supports. DMC50 Flex is designed for systems which experience diverse draw-off between 0 - 73 GPM* and is provided with 2” connections.

Model DMC80 Flex is a DRV80 pre-piped with isolation valves, strainers, check valves and a recirculation manifold with unistrut supports. DMC80 Flex is designed for systems which experience diverse draw-off between 0 - 165 GPM* and is provided with 3” connections.

The Brain® - Digital Mixing Centers (DMC)

Model DMC25-25 is a Digital Mixing Center pre-piped with a DRV25, isolation valves, strainers, check valves, temperature gauges, pressure gauges, control panel, and integral recirculation piping mounted on an enameled steel frame. DMC25-25 is configured for redundant service at 0 - 19 GMP*, or full-flow sercie at 0 - 41* GPM with 1.5” connections.

Model DMC40 is a Digital Mixing Center pre-piped with a DRV40, isolation valves, strainers, check valves, temperature gauges, pressure gauges, control panel, and integral recirculation piping mounted on an enameled steel frame. DMC40 is designed for systems which experience diverse draw-off between 0 - 41 GPM* with 1.5” connections.

Model DMC40-40 is a Digital Mixing Center pre-piped with two DRV40, isolation valves, strainers, check valves, temperature gauges, pressure gauges, control panel, and integral recirculation piping mounted on an enameled steel frame. DMC40-40 is configured for redundant service at 0 - 41 GPM*, or full-flow service at 0 - 115* GPM with 2.5” connections.

Model DMC50 is a Digital Mixing Center pre-piped with a DRV50, isolation valves, strainers, check valves, temperature gauges, pressure gauges, control panel, and integral recirculation piping mounted on an enameled steel frame. DMC50 is designed for systems which experience diverse draw-off between 0 - 73 GPM* with 2” connections.

Model DMC50-50 is a Digital Mixing Center pre-piped with two DRV50, isolation valves, strainers, check valves, temperature gauges, pressure gauges, control panel, and integral recirculation piping mounted on an enameled steel frame. DMC50-50 is configured for redundant service at 0 - 73 GPM*, or full-flow service at 0 - 165* GPM with 3” connections.

Model DMC80 is a Digital Mixing Center pre-piped with a DRV80, isolation valves, strainers, check valves, temperature gauges, pressure gauges, control panel, and integral recirculation piping mounted on an enameled steel frame. DMC80 is designed for systems which experience diverse draw-off between 0 - 165 GPM* with 3” connections.

Model DMC80-80 is a Digital Mixing Center pre-piped with two DRV80, isolation valves, strainers, check valves, temperature gauges, pressure gauges, control panel, and integral recirculation piping mounted on an enameled steel frame. DMC80-80 is configured for redundant service at 0 - 165 GPM*, or full-flow service at 0 - 294* GPM with 4” connections.

Model DMC80-80-80 is a Digital Mixing Center pre-piped with three DRV80, isolation valves, strainers, check valves, temperature gauges, pressure gauges, control panel, and integral recirculation piping mounted on an enameled steel frame. DMC80-80-80 is configured for redundant service at 0 - 294 GPM*, or full-flow service at 0 - 459* GPM with 5” connections.

* Note: Flow capacities indicated at 7.5 ft/sec pipeline velocity.

Designs, materials, weights and performance ratings are approximate and subject to change without notice. Visit **armstrong**international.com for up-to-date information.

Armstrong Hot Water Group, 221 Armstrong Blvd., Three Rivers, MI 49093 – USA Phone: 269-279-3602, Fax: 269-279-3130
armstronginternational.com

Digital

The Brain® Model DRV25

DRV25 Digital Recirculation Valve (DRV) designed specifically to be the primary water temperature controller in a continuously pumped circulating hot water system.

Digital technology provides enhanced water temperature control accuracy which resists zero system demand "Temperature Creep" without the use of a manual throttling valve or a temperature activated pump shut-off device (aquastat). Also capable of zoned system control with or without recirculation.

Completely integral digital valve with no need for external or ancillary components such as actuators, sensors or controllers.

Operational Specifications

- Ready to go out of the box or field adjustable via Bluetooth connectivity with the SAGE® mobile app
- +/-2°F DRV water temperature control at peak, moderate or zero fixture demand on hot water system designed for continuous recirculation
- 1°F minimum recirculating water temperature differential
- Programmable set point range of 81-158°F (27-70°C) capable of BAS or SAGE® mobile app for monitoring and adjustment
- Programmable thermal disinfection range of 158-185°F (70-85°C)
- Automatic safe closure of hot water inlet in response to: inlet supply failure, 110V power failure, or programmable high temperature error
- Automatic safe closure of hot water inlet powered by a replaceable lithium battery monitored for low-level alerting

Technical Specifications

- 100-240V AC
- Polymer Electronics Enclosure
- Stainless Steel Valve Construction
- Lead Free compliant
- Maximum inlet HW supply temperature 185°F (85°C)
- Minimum Continuous Recirculation - 2 GPM (7.6 LPM)
- Minimum System Draw Off with no recirculation - 0 GPM
- Conforms to ASSE 1017, CSA B125.3-11, UL E357437, and CE
- Operational water pressure of 10-200 psig (.7-13.3 barg)
- Bluetooth (BLE) enabled for direct communication with the DRV25 via the SAGE® mobile app status dashboard and programming.
- Shipping weight 6.8 lbs (3.1 kg)

Connectivity

RS485 Serial Port – Integral MODBUS RTU for direct connectivity to BAS. Seamless integration with SAGE® (BS) connectivity options.

SAGE® mobile app allows for Bluetooth (BLE) communications with the DRV25, and SAGE® to Cloud communications if optional mobile connectivity subscription is activated.

See DRV25BS for SAGE® (BS) module available with specific ProtoCessor cards for BAS Connectivity to systems which operate on Modbus TCP, BACnet™, or LonWorks™ protocols. Mobile Connectivity may be enabled by a customer activated no-term subscription.

Mobile Connectivity features smart hot water system dashboard monitoring, secure remote programming, multi-location view, temperature and system diagnostic alerts, with unlimited digital documentation and automated report generation.

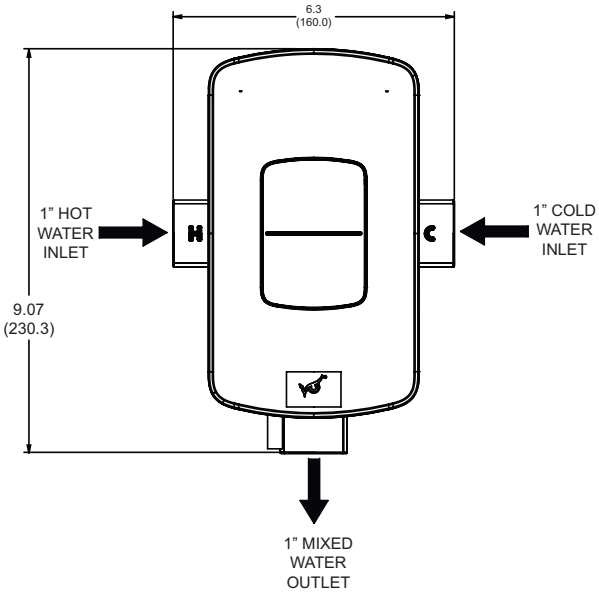

For a submittal drawing, refer to D112404.

Recirculation Systems - Digital (GPM and PSIG)						
Model DRV25	Pressure Drop (PSIG)				Minimum System Draw-Off	C_V
	5	10	15	20		
GPM	22	31	39	45	0	9.8

Recirculation Systems - Digital (LPM and BARG)						
Model DRV25	Pressure Drop (BARG)				Minimum System Draw-Off	K_V
	0.3	0.7	1.0	1.4		
LPM	81	118	145	171	0	8.5

Designs, materials, weights and performance ratings are approximate and subject to change without notice. Visit **armstrong**international.com for up-to-date information.

Armstrong Hot Water Group, 221 Armstrong Blvd., Three Rivers, MI 49093 – USA Phone: 269-279-3602, Fax: 269-279-3130
armstronginternational.com

Digital

The Brain® Model DRV25R

DRV25R Digital Recirculation Valve (DRV) designed specifically to be the primary water temperature controller in a continuously pumped circulating hot water system. DRV25R is supplied with a recirculation manifold as shown.

Digital technology provides enhanced water temperature control accuracy which resists zero system demand "Temperature Creep" without the use of a manual throttling valve or a temperature activated pump shut-off device (aquastat).

Completely integral digital valve with no need for external or ancillary components such as actuators, sensors or controllers.

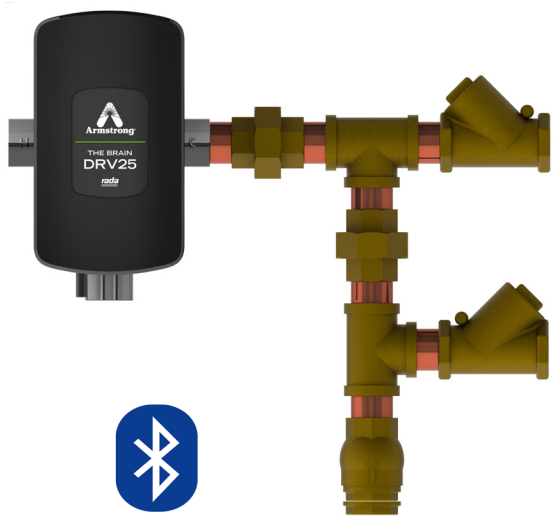

Operational Specifications

- Ready to go out of the box or field adjustable via Bluetooth connectivity with the SAGE® mobile app
- +/-2°F DRV water temperature control at peak, moderate or zero fixture demand on hot water system designed for continuous recirculation
- 1°F minimum recirculating water temperature differential
- Programmable set point range of 81-158°F (27-70°C) capable of BAS or SAGE® mobile app for monitoring and adjustment
- Programmable thermal disinfection range of 158-185°F (70-85°C)
- Automatic safe closure of hot water inlet in response to: inlet supply failure, 110V power failure, or programmable high temperature error
- Automatic safe closure of hot water inlet powered by a replaceable lithium battery monitored for low-level alerting

Technical Specifications

- 100-240V AC
- Polymer Electronics Enclosure
- Stainless Steel Valve Construction
- Lead Free compliant
- Maximum inlet HW supply temperature 185°F (85°C)
- Minimum Continuous Recirculation - 2 GPM (7.6 LPM)
- Minimum System Draw Off with no recirculation - 0 GPM
- Conforms to ASSE 1017, CSA B125.3-11, UL E357437, and CE
- Operational water pressure of 10-150 psig (.7-10.3 barg)
- Bluetooth (BLE) enabled for direct communication with the DRV25 via the SAGE® mobile app status dashboard and programming.
- Shipping weight 17 lbs (17.1 kg)

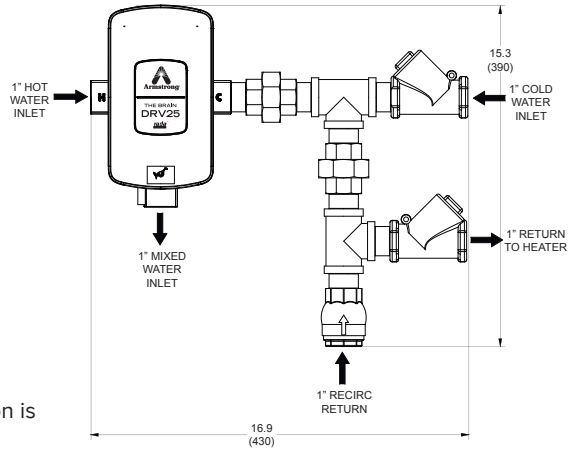

Connectivity

RS485 Serial Port – Integral MODBUS RTU for direct connectivity to BAS. Seamless integration with SAGE® (BS) connectivity options.

SAGE® mobile app allows for Bluetooth (BLE) communications with the DRV25, and SAGE® to Cloud communications if optional mobile connectivity subscription is activated

See DRV25RBS for SAGE® (BS) module available with specific ProtoCessor cards for BAS Connectivity to systems which operate on Modbus TCP, BACnet™, or LonWorks™ protocols. Mobile Connectivity may be enabled by a customer activated no-term subscription.

Mobile Connectivity features smart hot water system dashboard monitoring, secure remote programming, multi-location view, temperature and system diagnostic alerts, with unlimited digital documentation and automated report generation.

For a submittal drawing, refer to D112525.

Recirculation Systems - Digital (GPM and PSIG)

Model DRV25R	Pressure Drop (PSIG)				Minimum System Draw-Off	C_V
	5	10	15	20		
GPM	22	31	39	45	0	9.8

Recirculation Systems - Digital (LPM and BARG)

Model DRV25R	Pressure Drop (BARG)				Minimum System Draw-Off	K_V
	0.3	0.7	1.0	1.4		
LPM	81	118	145	171	0	8.5

Designs, materials, weights and performance ratings are approximate and subject to change without notice. Visit **armstrong**international.com for up-to-date information.

Armstrong Hot Water Group, 221 Armstrong Blvd., Three Rivers, MI 49093 – USA Phone: 269-279-3602, Fax: 269-279-3130
armstronginternational.com

Digital

The Brain® Model DMC25 Flex

DMC25 Flex is a fully Digital Mixing Center (DMC) designed specifically to be the primary water temperature controller in a continuously pumped circulating hot water system.

Digital technology provides enhanced water temperature control accuracy which resists zero system demand "Temperature Creep" without the use of a manual throttling valve or a temperature activated pump shut-off device (aquastat).

Completely integral digital valve with no need for external or ancillary components such as actuators, sensors or controllers.

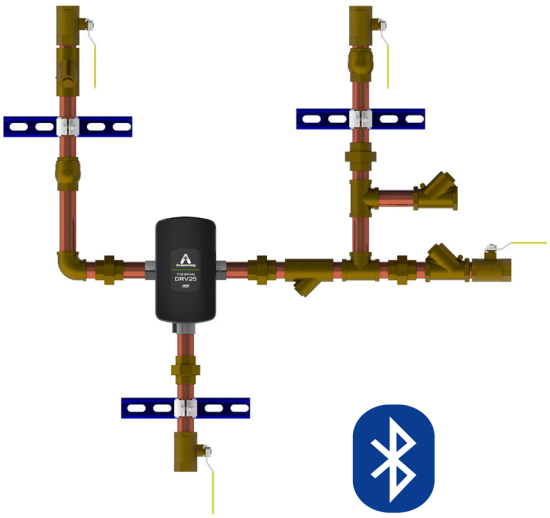

Operational Specifications

- Ready to go out of the box or field adjustable via Bluetooth connectivity with the SAGE® mobile app
- +/-2°F DRV water temperature control at peak, moderate or zero fixture demand on hot water system designed for continuous recirculation
- 1°F minimum recirculating water temperature differential
- Programmable set point range of 81-158°F (27-70°C) capable of BAS or SAGE® mobile app for monitoring and adjustment
- Programmable thermal disinfection range of 158-185°F (70-85°C)
- Automatic safe closure of hot water inlet in response to: inlet supply failure, 110V power failure, or programmable high temperature error
- Automatic safe closure of hot water inlet powered by a replaceable lithium battery monitored for low-level alerting

Technical Specifications

- 100-240V AC
- Polymer Electronics Enclosure
- Stainless Steel Valve Construction
- Lead Free compliant
- Maximum inlet HW supply temperature 185°F (85°C)
- Minimum Continuous Recirculation - 2 GPM (7.6 LPM)
- Minimum System Draw Off with no recirculation - 0 GPM
- Conforms to ASSE 1017, CSA B125.3-11, UL E357437, and CE
- Operational water pressure of 10-150 psig (.7-10.3 barg)
- Bluetooth (BLE) enabled for direct communication with the DRV25 via the SAGE® mobile app status dashboard and programming.
- Shipping weight 27 lbs (12.3 kg)

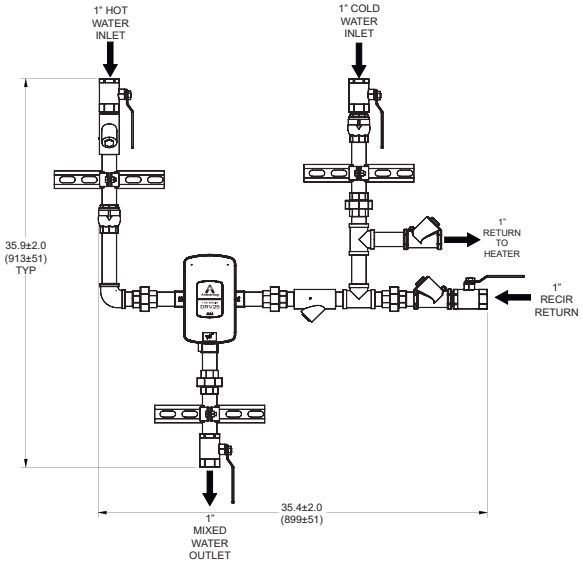

For a submittal drawing, refer to D113241.

Connectivity

RS485 Serial Port – Integral MODBUS RTU for direct connectivity to BAS. Seamless integration with SAGE® (BS) connectivity options.

SAGE® mobile app allows for Bluetooth (BLE) communications with the DRV25 and SAGE® to Cloud communications if optional mobile connectivity subscription is activated

See DMC25BS Flex for SAGE® (BS) module available with specific ProtoCessor cards for BAS Connectivity to systems which operate on Modbus TCP, BACnet™, or LonWorks™ protocols. Mobile Connectivity may be enabled by a customer activated no-term subscription.

Mobile Connectivity features smart hot water system dashboard monitoring, secure remote programming, multi-location view, temperature and system diagnostic alerts, with unlimited digital documentation and automated report generation.

Recirculation Systems - Digital (GPM and PSIG)

Model DMC25 Flex	Pressure Drop (PSIG)				Minimum System Draw-Off	C_v
	5	10	15	20		
GPM	22	31	39	45	0	9.8

Recirculation Systems - Digital (LPM and BARG)

Model DMC25 Flex	Pressure Drop (BARG)				Minimum System Draw-Off	K_v
	0.3	0.7	1.0	1.4		
LPM	81	118	145	171	0	8.5

Designs, materials, weights and performance ratings are approximate and subject to change without notice. Visit **armstrong**international.com for up-to-date information.

Armstrong Hot Water Group, 221 Armstrong Blvd., Three Rivers, MI 49093 – USA Phone: 269-279-3602, Fax: 269-279-3130
armstronginternational.com

Digital

The Brain® Model DMC25-25

DMC25-25 is a fully Digital Mixing Center (DMC) designed specifically to be the primary water temperature controller in a continuously pumped circulating hot water system.

Digital technology provides enhanced water temperature control accuracy which resists zero system demand “Temperature Creep” without the use of a manual throttling valve or a temperature activated pump shut-off device (aquastat).

Completely integral digital valve with no need for external or ancillary components such as actuators, sensors or controllers.

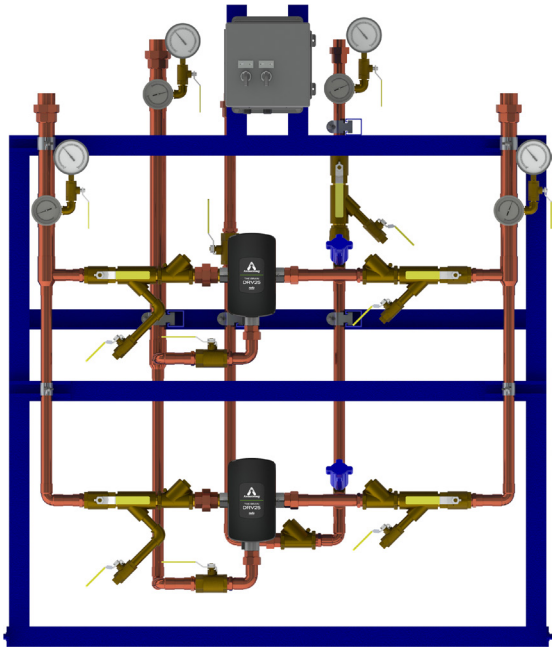

Operational Specifications

- Ready to go out of the box or field adjustable via Bluetooth connectivity with the SAGE® mobile app
- +/-2°F DRV water temperature control at peak, moderate or zero fixture demand on hot water system designed for continuous recirculation
- 1°F minimum recirculating water temperature differential
- Programmable set point range of 81-158°F (27-70°C) capable of BAS or SAGE® mobile app for monitoring and adjustment
- Programmable thermal disinfection range of 158-185°F (70-85°C)
- Automatic safe closure of hot water inlet in response to: inlet supply failure, 110V power failure, or programmable high temperature error
- Automatic safe closure of hot water inlet powered by a replaceable lithium battery monitored for low-level alerting

Technical Specifications

- 100-240V AC
- Polymer Electronics Enclosure
- Stainless Steel Valve Construction
- Lead Free compliant
- Maximum inlet HW supply temperature 185°F (85°C)
- Minimum Continuous Recirculation - 2 GPM (7.6 LPM) per valve
- Minimum System Draw Off with no recirculation - 0 GPM
- Conforms to ASSE 1017, CSA B125.3-11, UL E357437, and CE
- Operational water pressure of 10-150 psig (.7-10.3 barg)
- Bluetooth (BLE) enabled for direct communication with the DRV25 via the SAGE® mobile app status dashboard and programming.
- Shipping weight 300 lbs (136.4 kg)

Connectivity

RS485 Serial Port – Integral MODBUS RTU for direct connectivity to BAS. Seamless integration with SAGE® (BS) connectivity options.

SAGE® mobile app allows for Bluetooth (BLE) communications with the DRV25 and SAGE® to Cloud communications if optional mobile connectivity subscription is activated

See DMC25-25BS for SAGE® (BS) module available with specific ProtoCessor cards for BAS Connectivity to systems which operate on Modbus TCP, BACnet™, or LonWorks™ protocols. Mobile Connectivitymay be enabled by a customer activated no-term subscription.

Mobile Connectivity features smart hot water system dashboard monitoring, secure remote programming, multi-location view, temperature and system diagnostic alerts, with unlimited digital documentation and automated report generation.

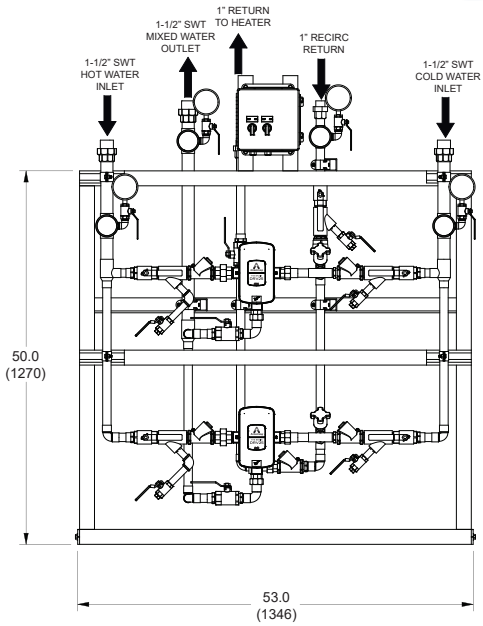

For a submittal drawing, refer to D113044.

Recirculation Systems - Digital (GPM and PSIG)						
Model DMC25-25	Pressure Drop (PSIG)				Minimum System Draw-Off	C_v
	5	10	15	20		
GPM	44	62	73	90	0	19.6

Recirculation Systems - Digital (LPM and BARG)						
Model DMC25-25	Pressure Drop (BARG)				Minimum System Draw-Off	K_v
	0.3	0.7	1.0	1.4		
LPM	167	235	295	341	0	17.0

Designs, materials, weights and performance ratings are approximate and subject to change without notice. Visit **armstrong**international.com for up-to-date information.

Armstrong Hot Water Group, 221 Armstrong Blvd., Three Rivers, MI 49093 – USA Phone: 269-279-3602, Fax: 269-279-3130
armstronginternational.com

Digital

The Brain® Model DRV40

DRV40 Digital Recirculation Valve (DRV) designed specifically to be the primary water temperature controller in a continuously pumped circulating hot water system.

Digital technology provides enhanced water temperature control accuracy which resists zero system demand "Temperature Creep" without the use of a manual throttling valve or a temperature activated pump shut-off device (aquastat).

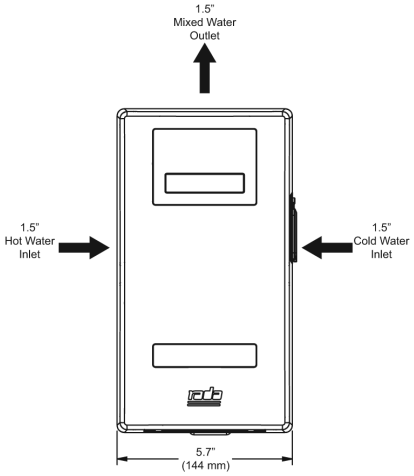

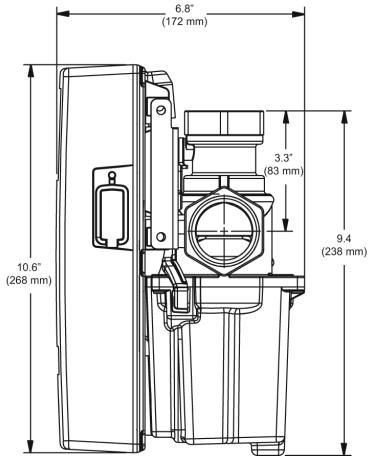

Operational Specifications

- +/-2°F DRV water temperature control at peak, moderate or zero fixture demand on hot water system designed for continuous recirculation
- 1°F minimum recirculating water temperature differential
- LCD display which indicates: set point, delivered temperature, error codes and alarm conditions capable of BAS and mobile connectivity
- Programmable set point range of 81-158°F (27-70°C) capable of BAS or mobile monitoring and adjustment
- Programmable thermal disinfection range of 158-185°F (70-85°C)
- Programmable 1st level hi/lo temp alarm display capable of BAS or mobile alerting
- Automatic safe closure of hot water inlet in response to: inlet supply failure, 110V power failure, or programmable high temperature error
- Automatic safe closure of hot water inlet powered by a replaceable lithium battery monitored for low-level alerting

Technical Specifications

- 100-240V AC
- Polymer Electronics Enclosure
- Stainless Steel Valve Construction
- Lead Free compliant
- Maximum inlet HW supply temperature 185°F (85°C)
- Minimum Continuous Recirculation - 5 GPM (19 LPM)
- Minimum System Draw Off - 0 GPM
- Conforms to ASSE 1017, CSA B125.3-11, UL E357437, and CE
- Operational water pressure of 10-200 psig (7-13.3 barg)
- Display in °C or °F
- Shipping weight 15 lbs (6.8 kg)
- Integral MODBUS RTU for direct connectivity to BAS, or SAGE®

Connectivity

RS485 Serial Port – Integral MODBUS RTU for direct connectivity to BAS. Seamless integration with SAGE® (BS) connectivity options.

See DRV40BS for SAGE® (BS) module available with specific ProtoCessor cards for BAS Connectivity to systems which operate on Modbus TCP, BACnet™, or LonWorks™ protocols. Mobile Connectivity may be enabled by a customer activated no-term subscription.

Mobile Connectivity features smart hot water system dashboard monitoring, secure remote programming, multi-location view, temperature and system diagnostic alerts, with unlimited digital documentation and automated report generation.

For a submittal drawing, refer to D41578.

Recirculation Systems - Digital (GPM and PSIG)

Model DRV40	Pressure Drop (PSIG)				Minimum System Draw-Off	C_V
	5	10	15	20		
GPM	48	70	85	98	0	22

Recirculation Systems - Digital (LPM and BARG)

Model DRV40	Pressure Drop (BARG)				Minimum System Draw-Off	C_V
	0.3	0.7	1.0	1.4		
LPM	181.7	265.0	321.8	371.0	0	22

Designs, materials, weights and performance ratings are approximate and subject to change without notice. Visit **armstrong**international.com for up-to-date information.

Armstrong Hot Water Group, 221 Armstrong Blvd., Three Rivers, MI 49093 – USA Phone: 269-279-3602, Fax: 269-279-3130
armstronginternational.com

Digital

The Brain® Model DRV40R

DRV40R Digital Recirculation Valve (DRV) designed specifically to be the primary water temperature controller in a continuously pumped circulating hot water system. DRV40R is supplied with a recirculation return manifold as shown.

Digital technology provides enhanced water temperature control accuracy which resists zero system demand "Temperature Creep" without the use of a manual throttling valve or a temperature activated pump shut-off device (aquastat).

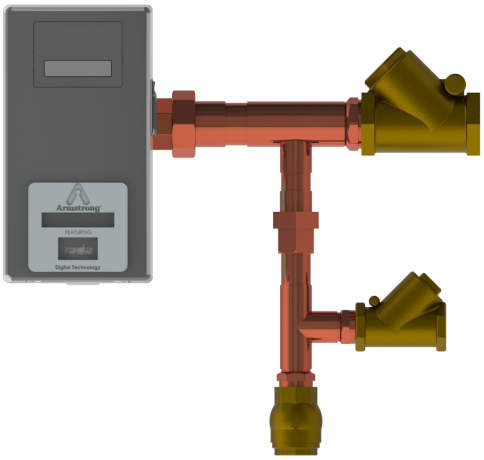

Operational Specifications

- +/-2°F DRV water temperature control at peak, moderate or zero fixture demand on hot water system designed for continuous recirculation
- 1°F minimum recirculating water temperature differential
- LCD display which indicates: set point, delivered temperature, error codes and alarm conditions capable of BAS and mobile connectivity
- Programmable set point range of 81-158°F (27-70°C) capable of BAS or mobile monitoring and adjustment
- Programmable thermal disinfection range of 158-185°F (70-85°C)
- Programmable 1st level hi/lo temp alarm display capable of BAS or mobile alerting
- Automatic safe closure of hot water inlet in response to: inlet supply failure, 110V power failure, or programmable high temperature error
- Automatic safe closure of hot water inlet powered by a replaceable lithium battery monitored for low-level alerting

Technical Specifications

- 100-240V AC
- Polymer Electronics Enclosure
- Stainless Steel Valve Construction
- Lead Free compliant
- Maximum inlet HW supply temperature 185°F (85°C)
- Minimum Continuous Recirculation - 5 GPM (19 LPM)
- Minimum System Draw Off - 0 GPM
- Conforms to ASSE 1017, CSA B125.3-11, UL E357437, and CE
- Operational water pressure of 10-150 psig (7-10 barg)
- Display in °C or °F
- Shipping weight 32 lbs (14.5 kg)
- Integral MODBUS RTU for direct connectivity to BAS, or SAGE®

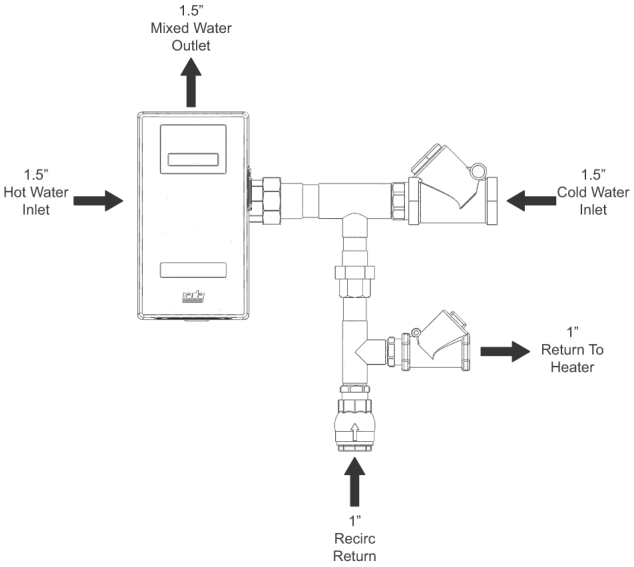

For a submittal drawing, refer to D40809.

Connectivity

RS485 Serial Port – Integral MODBUS RTU for direct connectivity to BAS. Seamless integration with SAGE® (BS) connectivity options.

See DRV40RBS for SAGE® (BS) module available with specific ProtoCessor cards for BAS Connectivity to systems which operate on Modbus TCP, BACnet™, or LonWorks™ protocols. Mobile Connectivity may be enabled by a customer activated no-term subscription.

Mobile Connectivity features smart hot water system dashboard monitoring, secure remote programming, multi-location view, temperature and system diagnostic alerts, with unlimited digital documentation and automated report generation.

Recirculation Systems - Digital (GPM and PSIG)

Model DRV40R	Pressure Drop (PSIG)				Minimum System Draw-Off	C_v
	5	10	15	20		
GPM	48	70	85	98	0	22

Recirculation Systems - Digital (LPM and BARG)

Model DRV40R	Pressure Drop (BARG)				Minimum System Draw-Off	C_v
	0.3	0.7	1.0	1.4		
LPM	181.7	265.0	321.8	371.0	0	22

Designs, materials, weights and performance ratings are approximate and subject to change without notice. Visit **armstrong**international.com for up-to-date information.

Armstrong Hot Water Group, 221 Armstrong Blvd., Three Rivers, MI 49093 – USA Phone: 269-279-3602, Fax: 269-279-3130
armstronginternational.com

Digital

The Brain® Model DMC40 Flex

DMC40 Flex is a fully Digital Mixing Center (DMC) specifically designed to be the primary water temperature controller in a domestic hot water system with continuous recirculation.

Digital technology provides precise water temperature control and resolves “temperature creep” common with other technologies during periods of no demand. The Brain operates independently without the support of manual throttling valves, temperature activated pump controls, or a series of supplemental components.

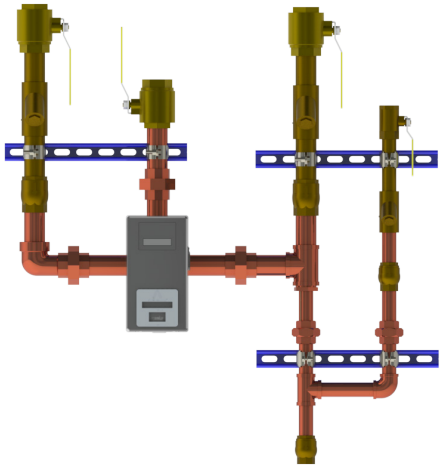

Operational Specifications

- +/-2°F DRV water temperature control at peak, moderate or zero fixture demand on hot water system designed for continuous recirculation
- 1°F minimum recirculating water temperature differential
- LCD display which indicates: set point, delivered temperature, error codes and alarm conditions capable of BAS and mobile connectivity
- Programmable set point range of 81-158°F (27-70°C) capable of BAS or mobile monitoring and adjustment
- Programmable thermal disinfection range of 158-185°F (70-85°C)
- Programmable 1st level hi/lo temp alarm display capable of BAS or mobile alerting
- Automatic safe closure of hot water inlet in response to: inlet supply failure, 110V power failure, or programmable high temperature error
- Automatic safe closure of hot water inlet powered by a replaceable lithium battery monitored for low-level alerting

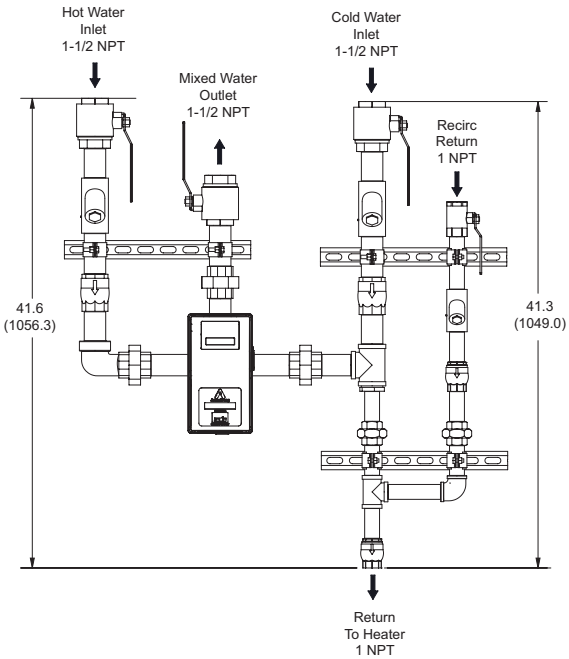

Technical Specifications

- 100-240V AC
- Polymer Electronics Enclosure
- Stainless Steel Valve Construction
- Lead Free compliant
- Maximum inlet HW supply temperature 185°F (85°C)
- Minimum Continuous Recirculation - 5 GPM (19 LPM)
- Minimum System Draw Off - 0 GPM
- Conforms to ASSE 1017, CSA B125.3-11, UL E357437, and CE
- Operational water pressure of 10-150 psig (7-10 barg)
- Display in °C or °F
- Shipping weight 98 lbs (44 kg)
- Integral MODBUS RTU for direct connectivity to BAS, or SAGE®

Connectivity

RS485 Serial Port – Integral MODBUS RTU for direct connectivity to BAS. Seamless integration with SAGE® (BS) connectivity options.

See DMC40BS Flex for SAGE® (BS) module available with specific ProtoCessor cards for BAS Connectivity to systems which operate on Modbus TCP, BACnet™, or LonWorks™ protocols. Mobile Connectivity may be enabled by a customer activated no-term subscription.

Mobile Connectivity features smart hot water system dashboard monitoring, secure remote programming, multi-location view, temperature and system diagnostic alerts, with unlimited digital documentation and automated report generation.

For a submittal drawing, refer to D86390.

Recirculation Systems - Digital (GPM and PSIG)

Model DMC40 Flex	Pressure Drop (PSIG)				Minimum System Draw-Off	C_V
	5	10	15	20		
GPM	48	70	85	98	0	22

Recirculation Systems - Digital (LPM and BARG)

Model DMC40 Flex	Pressure Drop (BARG)				Minimum System Draw-Off	C_V
	0.3	0.7	1.0	1.4		
LPM	181.7	265.0	321.8	371.0	0	22

Designs, materials, weights and performance ratings are approximate and subject to change without notice. Visit **armstrong**international.com for up-to-date information.

Armstrong Hot Water Group, 221 Armstrong Blvd., Three Rivers, MI 49093 – USA Phone: 269-279-3602, Fax: 269-279-3130
armstronginternational.com

Digital

The Brain® Model DMC40

DMC40 is a fully Digital Mixing Center (DMC) designed specifically to be the primary water temperature controller in a continuously pumped circulating hot water system.

Digital technology provides enhanced water temperature control accuracy which resists zero system demand "Temperature Creep" without the use of a manual throttling valve or a temperature activated pump shut-off device (aquastat).

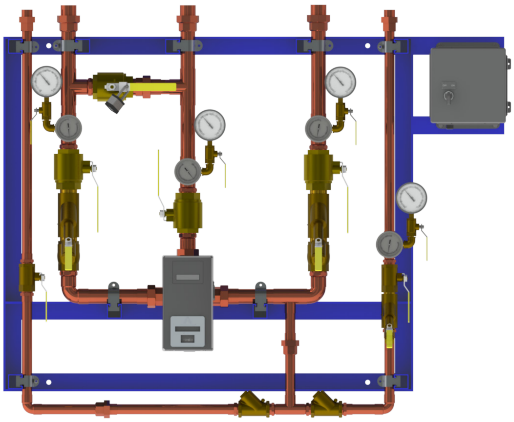

Operational Specifications (DRV40)

- +/-2°F DRV water temperature control at peak, moderate or zero fixture demand on hot water system designed for continuous recirculation
- 1°F minimum recirculating water temperature differential
- LCD display which indicates: set point, delivered temperature, error codes and alarm conditions capable of BAS and mobile connectivity
- Programmable set point range of 81-158°F (27-70°C) capable of BAS or mobile monitoring and adjustment
- Programmable thermal disinfection range of 158-185°F (70-85°C)
- Programmable 1st level hi/lo temp alarm display capable of BAS or mobile alerting
- Automatic safe closure of hot water inlet in response to: inlet supply failure, 110V power failure, or programmable high temperature error
- Automatic safe closure of hot water inlet powered by a replaceable lithium battery monitored for low-level alerting

Technical Specifications (DRV40)

- 100-240V AC
- Polymer Electronics Enclosure
- Stainless Steel Valve Construction
- Lead Free compliant
- Maximum inlet HW supply temperature 185°F (85°C)
- Minimum Continuous Recirculation - 5 GPM (19 LPM)
- Minimum System Draw Off - 0 GPM
- Conforms to ASSE 1017, CSA B125.3-11, UL E357437, and CE
- Operational water pressure of 10-150 psig (7-10 barg)
- Display in °C or °F
- Shipping weight 340 lbs (154 kg)
- Integral MODBUS RTU for direct connectivity to BAS, or SAGE®

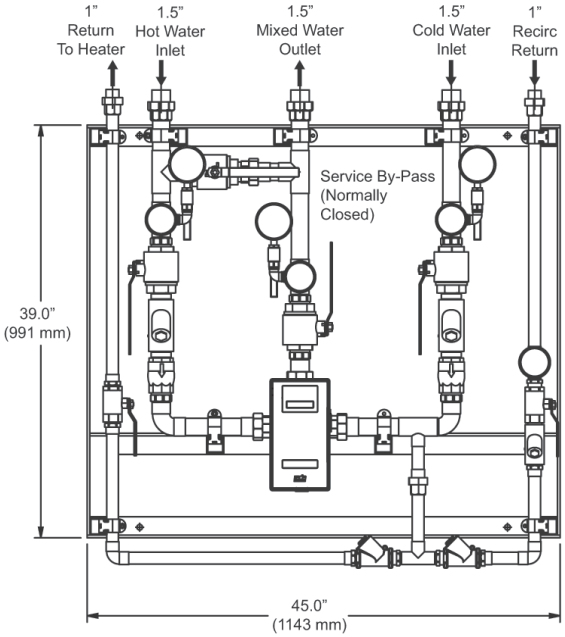

Connectivity

RS485 Serial Port – Integral MODBUS RTU for direct connectivity to BAS. Seamless integration with SAGE® (BS) connectivity options.

See DMC40BS for SAGE® (BS) module available with specific ProtoCessor cards for BAS Connectivity to systems which operate on Modbus TCP, BACnet™, or LonWorks™ protocols. Mobile Connectivity may be enabled by a customer activated no-term subscription.

Mobile Connectivity features smart hot water system dashboard monitoring, secure remote programming, multi-location view, temperature and system diagnostic alerts, with unlimited digital documentation and automated report generation.

For a submittal drawing, refer to D40805.G

Recirculation Systems - Digital (GPM and PSIG)

Model DMC40	Pressure Drop (PSIG)				Minimum System Draw-Off	C_v
	5	10	15	20		
GPM	48	70	85	98	0	22

Recirculation Systems - Digital (LPM and BARG)

Model DMC40	Pressure Drop (BARG)				Minimum System Draw-Off	C_v
	0.3	0.7	1.0	1.4		
LPM	181.7	265.0	321.8	371.0	0	22

Designs, materials, weights and performance ratings are approximate and subject to change without notice. Visit armstronginternational.com for up-to-date information.

Armstrong Hot Water Group, 221 Armstrong Blvd., Three Rivers, MI 49093 – USA Phone: 269-279-3602, Fax: 269-279-3130
armstronginternational.com

Digital

The Brain® Model DMC40-40

DMC40-40 is a fully Digital Mixing Center (DMC) designed specifically to be the primary water temperature controller in a continuously pumped circulating hot water system.

Digital technology provides enhanced water temperature control accuracy which resists zero system demand "Temperature Creep" without the use of a manual throttling valve or a temperature activated pump shut-off device (aquastat).

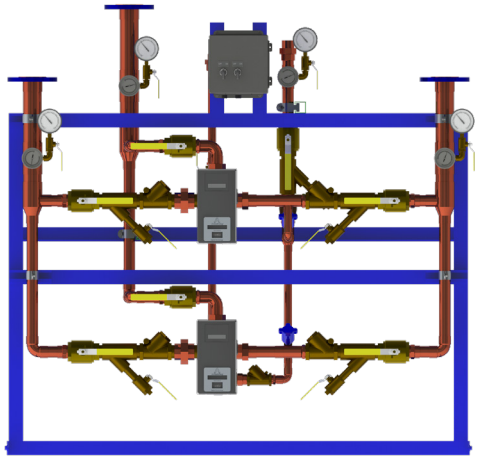

Operational Specifications (DRV40)

- +/-2°F DRV water temperature control at peak, moderate or zero fixture demand on hot water system designed for continuous recirculation
- 1°F minimum recirculating water temperature differential
- LCD display which indicates: set point, delivered temperature, error codes and alarm conditions capable of BAS and mobile connectivity
- Programmable set point range of 81-158°F (27-70°C) capable of BAS or mobile monitoring and adjustment
- Programmable thermal disinfection range of 158-185°F (70-85°C)
- Programmable 1st level hi/lo temp alarm display capable of BAS or mobile alerting
- Automatic safe closure of hot water inlet in response to: inlet supply failure, 110V power failure, or programmable high temperature error
- Automatic safe closure of hot water inlet powered by a replaceable lithium battery monitored for low-level alerting

Technical Specifications (DRV40)

- 100-240V AC
- Polymer Electronics Enclosure
- Stainless Steel Valve Construction
- Lead Free compliant
- Maximum inlet HW supply temperature 185°F (85°C)
- Minimum Continuous Recirculation - 5 GPM (19 LPM) per DRV40
- Minimum System Draw Off - 0 GPM
- Conforms to ASSE 1017, CSA B125.3-11, UL E357437, and CE
- Operational water pressure of 10-150 psig (7-10 barg)
- Display in °C or °F
- Shipping weight 650 lbs (296 kg)
- Integral MODBUS RTU for direct connectivity to BAS, or SAGE®

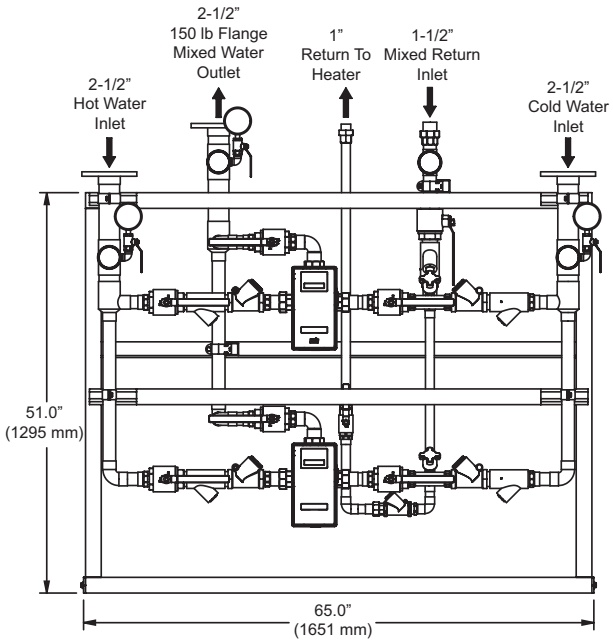

Connectivity

RS485 Serial Port – Integral MODBUS RTU for direct connectivity to BAS. Seamless integration with SAGE® (BS) connectivity options.

See DMC40-40BS for SAGE® (BS) module available with specific ProtoCessor cards for BAS Connectivity to systems which operate on Modbus TCP, BACnet™, or LonWorks™ protocols. Mobile Connectivity may be enabled by a customer activated no-term subscription.

Mobile Connectivity features smart hot water system dashboard monitoring, secure remote programming, multi-location view, temperature and system diagnostic alerts, with unlimited digital documentation and automated report generation.

For a submittal drawing, refer to D40807.

Recirculation Systems - Digital (GPM and PSIG)

Model DMC40-40	Pressure Drop (PSIG)				Minimum System Draw-Off	C_v
	5	10	15	20		
GPM	96	140	170	196	0	44

Recirculation Systems - Digital (LPM and BARG)

Model DMC40-40	Pressure Drop (BARG)				Minimum System Draw-Off	C_v
	0.3	0.7	1.0	1.4		
LPM	363.4	530.0	643.5	741.9	0	44

Designs, materials, weights and performance ratings are approximate and subject to change without notice. Visit armstrongintemational.com for up-to-date information.

Armstrong Hot Water Group, 221 Armstrong Blvd., Three Rivers, MI 49093 – USA Phone: 269-279-3602, Fax: 269-279-3130
armstrongintemational.com

Digital

The Brain® Model DRV50

DRV50 Digital Recirculation Valve (DRV) designed specifically to be the primary water temperature controller in a continuously pumped circulating hot water system.

Digital technology provides enhanced water temperature control accuracy which resists zero system demand "Temperature Creep" without the use of a manual throttling valve or a temperature activated pump shut-off device (aquastat).

Operational Specifications

- +/-2°F DRV water temperature control at peak, moderate or zero fixture demand on hot water system designed for continuous recirculation
- 1°F minimum recirculating water temperature differential
- LCD display which indicates: set point, delivered temperature, error codes and alarm conditions capable of BAS and mobile connectivity
- Programmable set point range of 81-158°F (27-70°C) capable of BAS or mobile monitoring and adjustment
- Programmable thermal disinfection range of 158-185°F (70-85°C)
- Programmable 1st level hi/lo temp alarm display capable of BAS or mobile alerting
- Automatic safe closure of hot water inlet in response to: inlet supply failure, 110V power failure, or programmable high temperature error
- Automatic safe closure of hot water inlet powered by a replaceable lithium battery monitored for low-level alerting

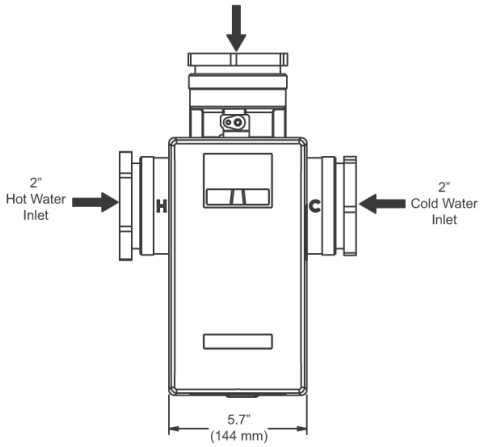

Technical Specifications

- 100-240V AC
- Polymer Electronics Enclosure
- Stainless Steel Valve Construction
- Lead Free compliant
- Maximum inlet HW supply temperature 185°F (85°C)
- Minimum Continuous Recirculation - 10 GPM (38 LPM)
- Minimum System Draw Off - 0 GPM
- Conforms to ASSE 1017, CSA B125.3-11, UL E357437, and CE
- Operational water pressure of 10-200 psig (7-13.3 barg)
- Display in °C or °F
- Shipping weight 23 lbs (10 kg)
- Integral MODBUS RTU for direct connectivity to BAS, or SAGE®

Connectivity

RS485 Serial Port – Integral MODBUS RTU for direct connectivity to BAS. Seamless integration with SAGE® (BS) connectivity options.

See DRV50BS for SAGE® (BS) module available with specific ProtoCessor cards for BAS Connectivity to systems which operate on Modbus TCP, BACnet™, or LonWorks™ protocols. Mobile Connectivity may be enabled by a customer activated no-term subscription.

Mobile Connectivity features smart hot water system dashboard monitoring, secure remote programming, multi-location view, temperature and system diagnostic alerts, with unlimited digital documentation and automated report generation.

For a submittal drawing, refer to D40864.

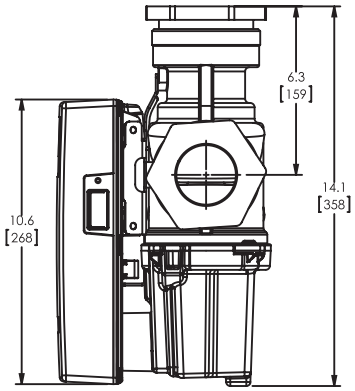

Recirculation Systems - Digital (GPM and PSIG)						
Model DRV50	Pressure Drop (PSIG)				Minimum System Draw-Off	C_v
	5	10	15	20		
GPM	94	133	163	188	0	42

Recirculation Systems - Digital (LPM and BARG)						
Model DRV50	Pressure Drop (BARG)				Minimum System Draw-Off	C_v
	0.3	0.7	1.0	1.4		
LPM	355.8	503.5	617.0	711.7	0	42

Designs, materials, weights and performance ratings are approximate and subject to change without notice. Visit armstronginternational.com for up-to-date information.

Armstrong Hot Water Group, 221 Armstrong Blvd., Three Rivers, MI 49093 – USA Phone: 269-279-3602, Fax: 269-279-3130
armstronginternational.com

Digital

The Brain® Model DRV50R

DRV50R Digital Recirculation Valve (DRV) designed specifically to be the primary water temperature controller in a continuously pumped circulating hot water system. DRV50R is supplied with a recirculation return manifold as shown.

Digital technology provides enhanced water temperature control accuracy which resists zero system demand "Temperature Creep" without the use of a manual throttling valve or a temperature activated pump shut-off device (aquastat).

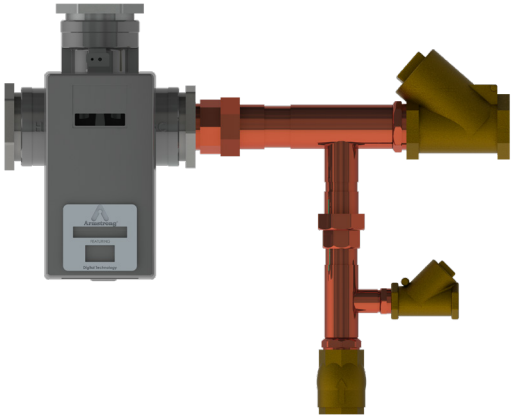

Operational Specifications

- +/-2°F DRV water temperature control at peak, moderate or zero fixture demand on hot water system designed for continuous recirculation
- 1°F minimum recirculating water temperature differential
- LCD display which indicates: set point, delivered temperature, error codes and alarm conditions capable of BAS and mobile connectivity
- Programmable set point range of 81-158°F (27-70°C) capable of BAS or mobile monitoring and adjustment
- Programmable thermal disinfection range of 158-185°F (70-85°C)
- Programmable 1st level hi/lo temp alarm display capable of BAS or mobile alerting
- Automatic safe closure of hot water inlet in response to: inlet supply failure, 110V power failure, or programmable high temperature error
- Automatic safe closure of hot water inlet powered by a replaceable lithium battery monitored for low-level alerting

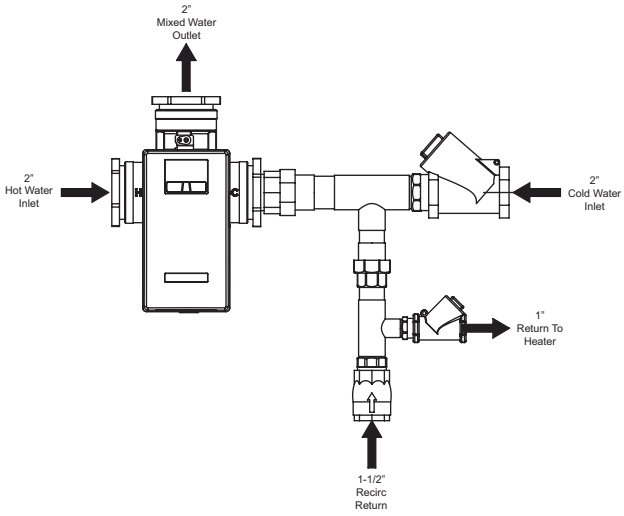

Technical Specifications

- 100-240V AC
- Polymer Electronics Enclosure
- Stainless Steel Valve Construction
- Lead Free compliant
- Maximum inlet HW supply temperature 185°F (85°C)
- Minimum Continuous Recirculation - 10 GPM (38 LPM)
- Minimum System Draw Off - 0 GPM
- Conforms to ASSE 1017, CSA B125.3-11, UL E357437, and CE
- Operational water pressure of 10-150 psig (7-10 barg)
- Display in °C or °F
- Shipping weight 67 lbs (31 kg)
- Integral MODBUS RTU for direct connectivity to BAS, or SAGE®

Connectivity

RS485 Serial Port – Integral MODBUS RTU for direct connectivity to BAS. Seamless integration with SAGE® (BS) connectivity options.

See DRV50RBS for SAGE® (BS) module available with specific ProtoCessor cards for BAS Connectivity to systems which operate on Modbus TCP, BACnet™, or LonWorks™ protocols. Mobile Connectivity may be enabled by a customer activated no-term subscription.

Mobile Connectivity features smart hot water system dashboard monitoring, secure remote programming, multi-location view, temperature and system diagnostic alerts, with unlimited digital documentation and automated report generation.

For a submittal drawing, refer to D40813.

Recirculation Systems - Digital (GPM and PSIG)

Model DRV50R	Pressure Drop (PSIG)				Minimum System Draw-Off	C_V
	5	10	15	20		
GPM	94	133	163	188	0	42

Recirculation Systems - Digital (LPM and BARG)

Model DRV50R	Pressure Drop (BARG)				Minimum System Draw-Off	C_V
	0.3	0.7	1.0	1.4		
LPM	355.8	503.5	617.0	711.7	0	42

Designs, materials, weights and performance ratings are approximate and subject to change without notice. Visit **armstrong**international.com for up-to-date information.

Armstrong Hot Water Group, 221 Armstrong Blvd., Three Rivers, MI 49093 – USA Phone: 269-279-3602, Fax: 269-279-3130
armstronginternational.com

Digital

The Brain® Model DMC50 Flex

DMC50 Flex is a fully Digital Mixing Center (DMC) specifically designed to be the primary water temperature controller in a domestic hot water system with continuous recirculation.

Digital technology provides precise water temperature control and resolves “temperature creep” common with other technologies during periods of no demand. The Brain operates independently without the support of manual throttling valves, temperature activated pump controls, or a series of supplemental components.

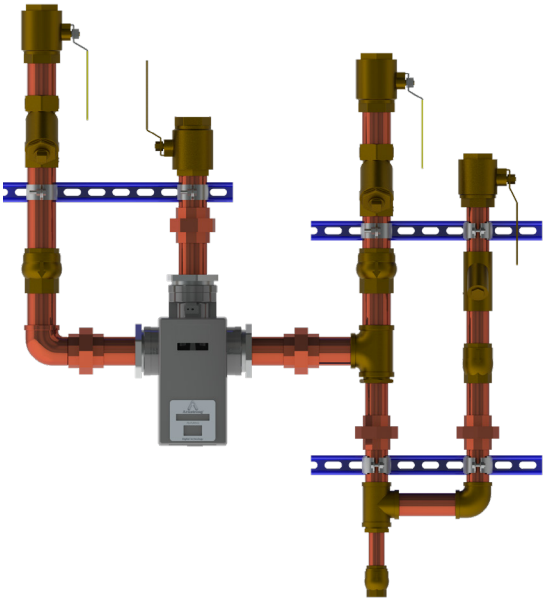

Operational Specifications

- +/-2°F DRV water temperature control at peak, moderate or zero fixture demand on hot water system designed for continuous recirculation
- 1°F minimum recirculating water temperature differential
- LCD display which indicates: set point, delivered temperature, error codes and alarm conditions capable of BAS and mobile connectivity
- Programmable set point range of 81-158°F (27-70°C) capable of BAS or mobile monitoring and adjustment
- Programmable thermal disinfection range of 158-185°F (70-85°C)
- Programmable 1st level hi/lo temp alarm display capable of BAS or mobile alerting
- Automatic safe closure of hot water inlet in response to: inlet supply failure, 110V power failure, or programmable high temperature error
- Automatic safe closure of hot water inlet powered by a replaceable lithium battery monitored for low-level alerting

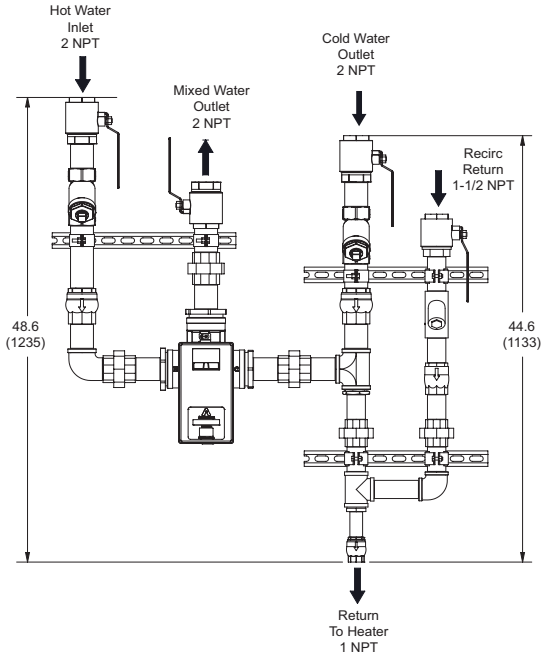

Technical Specifications

- 100-240V AC
- Polymer Electronics Enclosure
- Stainless Steel Valve Construction
- Lead Free compliant
- Maximum inlet HW supply temperature 185°F (85°C)
- Minimum Continuous Recirculation - 10 GPM (38 LPM)
- Minimum System Draw Off - 0 GPM
- Conforms to ASSE 1017, CSA B125.3-11, UL E357437, and CE
- Operational water pressure of 10-150 psig (7-10 barg)
- Display in °C or °F
- Shipping weight 365 lbs (166 kg)
- Integral MODBUS RTU for direct connectivity to BAS, or SAGE®

Connectivity

RS485 Serial Port – Integral MODBUS RTU for direct connectivity to BAS. Seamless integration with SAGE® (BS) connectivity options.

See DMC50BS Flex for SAGE® (BS) module available with specific ProtoCessor cards for BAS Connectivity to systems which operate on Modbus TCP, BACnet™, or LonWorks™ protocols. Mobile Connectivity may be enabled by a customer activated no-term subscription.

Mobile Connectivity features smart hot water system dashboard monitoring, secure remote programming, multi-location view, temperature and system diagnostic alerts, with unlimited digital documentation and automated report generation.

For a submittal drawing, refer to D86393.

Recirculation Systems - Digital (GPM and PSIG)

Model DMC50 Flex	Pressure Drop (PSIG)				Minimum System Draw-Off	C_V
	5	10	15	20		
GPM	94	133	163	188	0	42

Recirculation Systems - Digital (LPM and BARG)

Model DMC50 Flex	Pressure Drop (BARG)				Minimum System Draw-Off	C_V
	0.3	0.7	1.0	1.4		
LPM	355.8	503.5	617.0	711.7	0	42

Designs, materials, weights and performance ratings are approximate and subject to change without notice. Visit **armstrong**international.com for up-to-date information.

Armstrong Hot Water Group, 221 Armstrong Blvd., Three Rivers, MI 49093 – USA Phone: 269-279-3602, Fax: 269-279-3130
armstronginternational.com

Digital

The Brain® Model DMC50

DMC50 is a fully Digial Mixing Center (DMC) designed specifically to be the primary water temperature controller in a continuously pumped circulating hot water system.

Digital technology provides enhanced water temperature control accuracy which resists zero system demand “Temperature Creep” without the use of a manual throttling valve or a temperature activated pump shut-off device (aquastat).

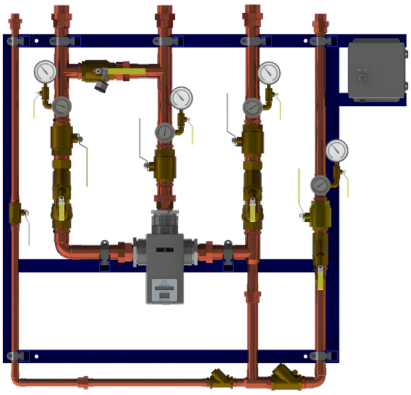

Operational Specifications (DRV50)

- +/-2°F DRV water temperature control at peak, moderate or zero fixture demand on hot water system designed for continuous recirculation
- 1°F minimum recirculating water temperature differential
- LCD display which indicates: set point, delivered temperature, error codes and alarm conditions capable of BAS and mobile connectivity
- Programmable set point range of 81-158°F (27-70°C) capable of BAS or mobile monitoring and adjustment
- Programmable thermal disinfection range of 158-185°F (70-85°C)
- Programmable 1st level hi/lo temp alarm display capable of BAS or mobile alerting
- Automatic safe closure of hot water inlet in response to: inlet supply failure, 110V power failure, or programmable high temperature error
- Automatic safe closure of hot water inlet powered by a replaceable lithium battery monitored for low-level alerting

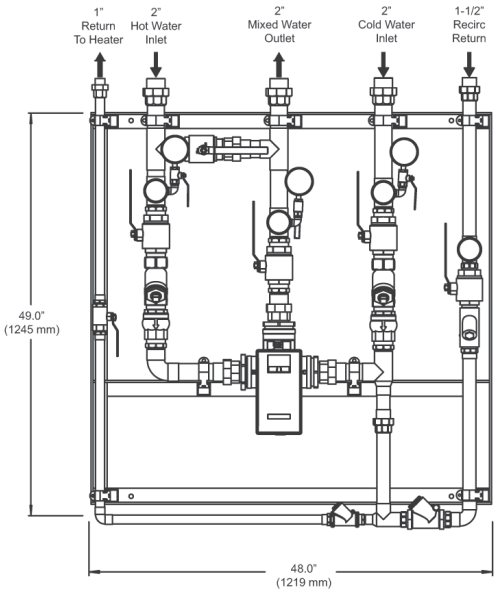

Technical Specifications (DRV50)

- 100-240V AC
- Polymer Electronics Enclosure
- Stainless Steel Valve Construction
- Lead Free compliant
- Maximum inlet HW supply temperature 185°F (85°C)
- Minimum Continuous Recirculation - 10 GPM (38 LPM)
- Minimum System Draw Off - 0 GPM
- Conforms to ASSE 1017, CSA B125.3-11, UL E357437, and CE
- Operational water pressure of 10-150 psig (7-10 barg)
- Display in °C or °F
- Shipping weight 530 lbs (241 kg)
- Integral MODBUS RTU for direct connectivity to BAS, or SAGE®

Connectivity

RS485 Serial Port – Integral MODBUS RTU for direct connectivity to BAS. Seamless integration with SAGE® (BS) connectivity options.

See DMC50BS for SAGE® (BS) module available with specific ProtoCessor cards for BAS Connectivity to systems which operate on Modbus TCP, BACnet™, or LonWorks™ protocols. Mobile Connectivity may be enabled by a customer activated no-term subscription.

Mobile Connectivity features smart hot water system dashboard monitoring, secure remote programming, multi-location view, temperature and system diagnostic alerts, with unlimited digital documentation and automated report generation.

For a submittal drawing, refer to D40811.

Recirculation Systems - Digital (GPM and PSIG)

Model DMC50	Pressure Drop (PSIG)				Minimum System Draw-Off	C_v
	5	10	15	20		
GPM	94	133	163	188	0	42

Recirculation Systems - Digital (LPM and BARG)

Model DMC50	Pressure Drop (BARG)				Minimum System Draw-Off	C_v
	0.3	0.7	1.0	1.4		
LPM	355.8	503.5	617.0	711.7	0	42

Designs, materials, weights and performance ratings are approximate and subject to change without notice. Visit **armstrong**international.com for up-to-date information.

Armstrong Hot Water Group, 221 Armstrong Blvd., Three Rivers, MI 49093 – USA Phone: 269-279-3602, Fax: 269-279-3130
armstronginternational.com

Digital

The Brain® Model DMC50-50

DMC50-50 is designed such that one valve is 100% redundant or can operate together to deliver blended flow rates less than 165 gpm at 7.5 ft/sec pipeline velocity.

Digital technology provides enhanced water temperature control accuracy which resists zero system demand "Temperature Creep" without the use of a manual throttling valve or a temperature activated pump shut-off device (aquastat).

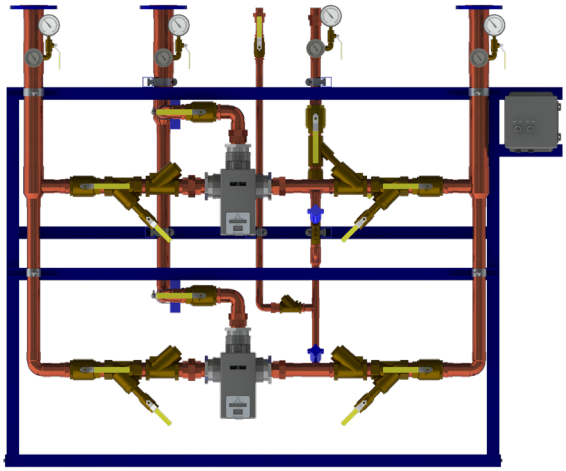

Operational Specifications (DRV50)

- +/-2°F DRV water temperature control at peak, moderate or zero fixture demand on hot water system designed for continuous recirculation
- 1°F minimum recirculating water temperature differential
- LCD display which indicates: set point, delivered temperature, error codes and alarm conditions capable of BAS and mobile connectivity
- Programmable set point range of 81-158°F (27-70°C) capable of BAS or mobile monitoring and adjustment
- Programmable thermal disinfection range of 158-185°F (70-85°C)
- Programmable 1st level hi/lo temp alarm display capable of BAS or mobile alerting
- Automatic safe closure of hot water inlet in response to: inlet supply failure, 110V power failure, or programmable high temperature error
- Automatic safe closure of hot water inlet powered by a replaceable lithium battery monitored for low-level alerting

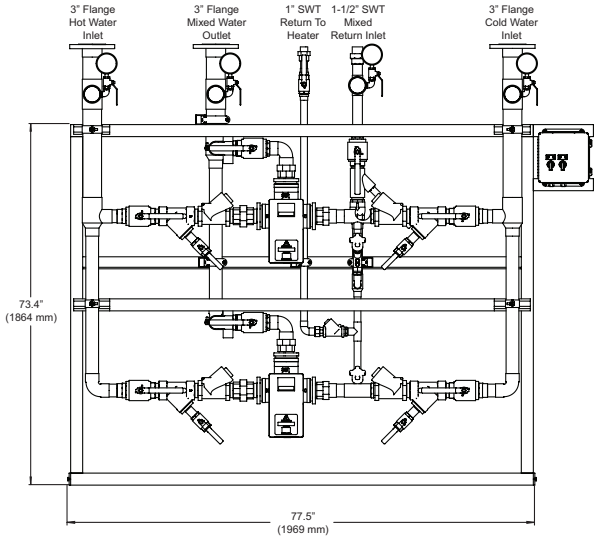

Technical Specifications (DRV50)

- 100-240V AC
- Polymer Electronics Enclosure
- Stainless Steel Valve Construction
- Lead Free compliant
- Maximum inlet HW supply temperature 185°F (85°C)
- Minimum Continuous Recirculation - 10 GPM (38 LPM) per DRV50
- Minimum System Draw Off - 0 GPM
- Conforms to ASSE 1017, CSA B125.3-11, UL E357437, and CE
- Operational water pressure of 10-150 psig (7-10 barg)
- Display in °C or °F
- Shipping weight 870 lbs (395 kg)
- Integral MODBUS RTU for direct connectivity to BAS, or SAGE®

Connectivity

RS485 Serial Port – Integral MODBUS RTU for direct connectivity to BAS. Seamless integration with SAGE® (BS) connectivity options.

See DMC50-50BS for SAGE® (BS) module available with specific ProtoCessor cards for BAS Connectivity to systems which operate on Modbus TCP, BACnet™, or LonWorks™ protocols. Mobile Connectivity may be enabled by a customer activated no-term subscription.

Mobile Connectivity features smart hot water system dashboard monitoring, secure remote programming, multi-location view, temperature and system diagnostic alerts, with unlimited digital documentation and automated report generation.

For a submittal drawing, refer to D85100.

Recirculation Systems - Digital (GPM and PSIG)

Model DMC50-50	Pressure Drop (PSIG) 5	Minimum System Draw-Off	C_V
GPM	188	0	84

Recirculation Systems - Digital (LPM and BARG)

Model DMC50-50	Pressure Drop (BARG) 0.3	Minimum System Draw-Off	C_V
LPM	711.7	0	84

Designs, materials, weights and performance ratings are approximate and subject to change without notice. Visit **armstrong**international.com for up-to-date information.

Armstrong Hot Water Group, 221 Armstrong Blvd., Three Rivers, MI 49093 – USA Phone: 269-279-3602, Fax: 269-279-3130
armstronginternational.com

Digital

The Brain® Model DRV80

DRV80 Digital Recirculation Valve (DRV) designed specifically to be the primary water temperature controller in a continuously pumped circulating hot water system.

Digital technology provides enhanced water temperature control accuracy which resists zero system demand "Temperature Creep" without the use of a manual throttling valve or a temperature activated pump shut-off device (aquastat).

Operational Specifications

- +/-2°F DRV water temperature control at peak, moderate or zero fixture demand on hot water system designed for continuous recirculation
- 1°F minimum recirculating water temperature differential
- LCD display which indicates: set point, delivered temperature, error codes and alarm conditions capable of BAS and mobile connectivity
- Programmable set point range of 81-158°F (27-70°C) capable of BAS or mobile monitoring and adjustment
- Programmable thermal disinfection range of 158-185°F (70-85°C)
- Programmable 1st level hi/lo temp alarm display capable of BAS or mobile alerting
- Automatic safe closure of hot water inlet in response to: inlet supply failure, 110V power failure, or programmable high temperature error
- Automatic safe closure of hot water inlet powered by a replaceable lithium battery monitored for low-level alerting

Technical Specifications

- 100-240V AC
- Polymer Electronics Enclosure
- Stainless Steel Valve Construction
- Lead Free compliant
- Maximum inlet HW supply temperature 185°F (85°C)
- Minimum Continuous Recirculation - 10 GPM (38 LPM)
- Minimum System Draw Off - 0 GPM
- Conforms to ASSE 1017, CSA B125.3-11, UL E357437, and CE
- Operational water pressure of 10-200 psig (7-13.3 barg)
- Display in °C or °F
- Shipping weight 43 lbs (19.5 kg)
- Integral MODBUS RTU for direct connectivity to BAS, or SAGE®

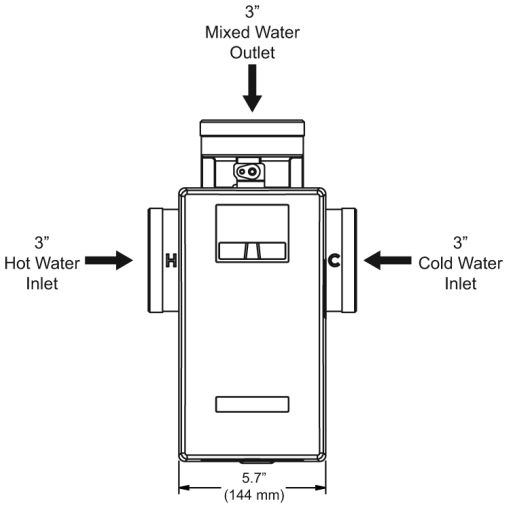

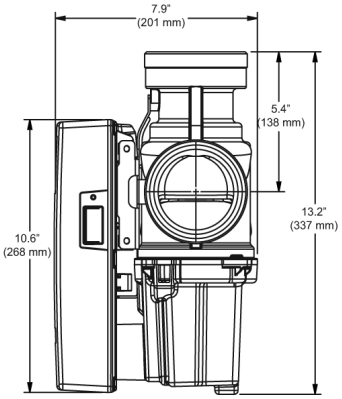

Connectivity

RS485 Serial Port – Integral MODBUS RTU for direct connectivity to BAS. Seamless integration with SAGE® (BS) connectivity options.

See DRV80BS for SAGE® (BS) module available with specific ProtoCessor cards for BAS Connectivity to systems which operate on Modbus TCP, BACnet™, or LonWorks™ protocols. Mobile Connectivity may be enabled by a customer activated no-term subscription.

Mobile Connectivity features smart hot water system dashboard monitoring, secure remote programming, multi-location view, temperature and system diagnostic alerts, with unlimited digital documentation and automated report generation.

For a submittal drawing, refer to D41579.

Recirculation Systems - Digital (GPM and PSIG)

Model DRV80	Pressure Drop (PSIG)				Minimum System Draw-Off	C_V
	5	10	15	20		
GPM	94	133	163	188	0	42

Recirculation Systems - Digital (LPM and BARG)

Model DRV80	Pressure Drop (BARG)				Minimum System Draw-Off	C_V
	0.3	0.7	1.0	1.4		
LPM	355.8	503.5	617.0	711.7	0	42

Designs, materials, weights and performance ratings are approximate and subject to change without notice. Visit **armstrong**international.com for up-to-date information.

Armstrong Hot Water Group, 221 Armstrong Blvd., Three Rivers, MI 49093 – USA Phone: 269-279-3602, Fax: 269-279-3130
armstronginternational.com

Digital

The Brain® Model DRV80R

DRV80R Digital Recirculation Valve (DRV) designed specifically to be the primary water temperature controller in a continuously pumped circulating hot water system. DRV80R is supplied with a recirculation return manifold as shown.

Digital technology provides enhanced water temperature control accuracy which resists zero system demand "Temperature Creep" without the use of a manual throttling valve or a temperature activated pump shut-off device (aquastat).

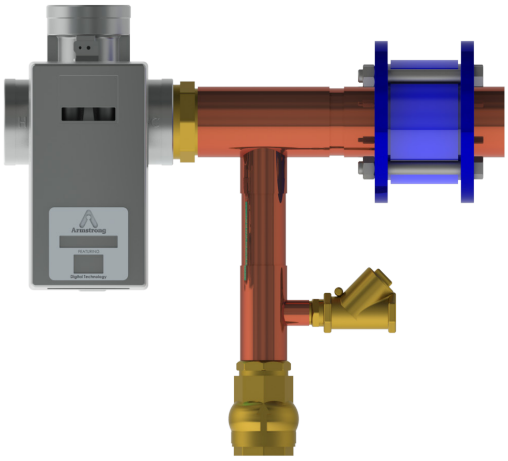

Operational Specifications

- +/-2°F DRV water temperature control at peak, moderate or zero fixture demand on hot water system designed for continuous recirculation
- 1°F minimum recirculating water temperature differential
- LCD display which indicates: set point, delivered temperature, error codes and alarm conditions capable of BAS and mobile connectivity
- Programmable set point range of 81-158°F (27-70°C) capable of BAS or mobile monitoring and adjustment
- Programmable thermal disinfection range of 158-185°F (70-85°C)
- Programmable 1st level hi/lo temp alarm display capable of BAS or mobile alerting
- Automatic safe closure of hot water inlet in response to: inlet supply failure, 110V power failure, or programmable high temperature error
- Automatic safe closure of hot water inlet powered by a replaceable lithium battery monitored for low-level alerting

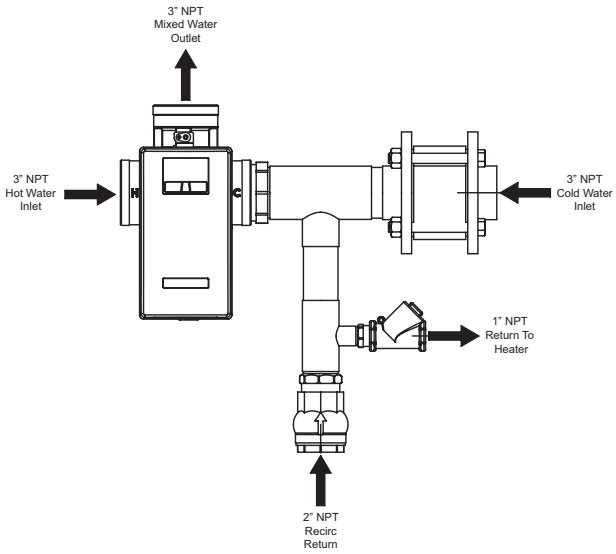

Technical Specifications

- 100-240V AC
- Polymer Electronics Enclosure
- Stainless Steel Valve Construction
- Lead Free compliant
- Maximum inlet HW supply temperature 185°F (85°C)
- Minimum Continuous Recirculation - 10 GPM (38 LPM)
- Minimum System Draw Off - 0 GPM
- Conforms to ASSE 1017, CSA B125.3-11, UL E357437, and CE
- Operational water pressure of 10-150 psig (7-10 barg)
- Display in °C or °F
- Shipping weight 84 lbs (38 kg)
- Integral MODBUS RTU for direct connectivity to BAS, or SAGE®

Connectivity

RS485 Serial Port – Integral MODBUS RTU for direct connectivity to BAS. Seamless integration with SAGE® (BS) connectivity options

See DRV80RBS for SAGE® (BS) module available with specific ProtoCessor cards for BAS Connectivity to systems which operate on Modbus TCP, BACnet™, or LonWorks™ protocols. Mobile Connectivity may be enabled by a customer activated no-term subscription.

Mobile Connectivity features smart hot water system dashboard monitoring, secure remote programming, multi-location view, temperature and system diagnostic alerts, with unlimited digital documentation and automated report generation.

For a submittal drawing, refer to D40821.

Recirculation Systems - Digital (GPM and PSIG)

Model DRV80R	Pressure Drop (PSIG)				Minimum System Draw-Off	C_V
	5	10	15	20		
GPM	94	133	163	188	0	42

Recirculation Systems - Digital (LPM and BARG)

Model DRV80R	Pressure Drop (BARG)				Minimum System Draw-Off	C_V
	0.3	0.7	1.0	1.4		
LPM	355.8	503.5	617.0	711.7	0	42

Designs, materials, weights and performance ratings are approximate and subject to change without notice. Visit **armstrong**international.com for up-to-date information.

Armstrong Hot Water Group, 221 Armstrong Blvd., Three Rivers, MI 49093 – USA Phone: 269-279-3602, Fax: 269-279-3130
armstronginternational.com

Digital

The Brain® Model DMC80 Flex

DMC80 Flex is a fully Digital Mixing Center (DMC) specifically designed to be the primary water temperature controller in a domestic hot water system with continuous recirculation.

Digital technology provides precise water temperature control and resolves "temperature creep" common with other technologies during periods of no demand. The Brain operates independently without the support of manual throttling valves, temperature activated pump controls, or a series of supplemental components.

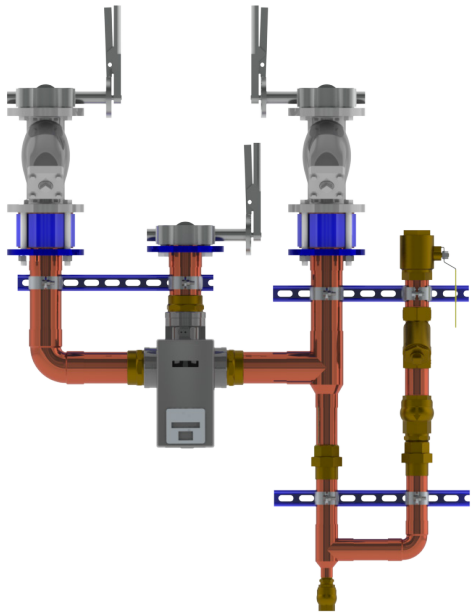

Operational Specifications

- +/-2°F DRV water temperature control at peak, moderate or zero fixture demand on hot water system designed for continuous recirculation
- 1°F minimum recirculating water temperature differential
- LCD display which indicates: set point, delivered temperature, error codes and alarm conditions capable of BAS and mobile connectivity
- Programmable set point range of 81-158°F (27-70°C) capable of BAS or mobile monitoring and adjustment
- Programmable thermal disinfection range of 158-185°F (70-85°C)
- Programmable 1st level hi/lo temp alarm display capable of BAS or mobile alerting
- Automatic safe closure of hot water inlet in response to: inlet supply failure, 110V power failure, or programmable high temperature error
- Automatic safe closure of hot water inlet powered by a replaceable lithium battery monitored for low-level alerting

Technical Specifications

- 100-240V AC
- Polymer Electronics Enclosure
- Stainless Steel Valve Construction
- Lead Free compliant
- Maximum inlet HW supply temperature 185°F (85°C)
- Minimum Continuous Recirculation - 10 GPM (38 LPM)
- Minimum System Draw Off - 0 GPM
- Conforms to ASSE 1017, CSA B125.3-11, UL E357437, and CE
- Operational water pressure of 10-150 psig (7-10 barg)
- Display in °C or °F
- Shipping weight 550 lbs (249 kg)
- Integral MODBUS RTU for direct connectivity to BAS, or SAGE®

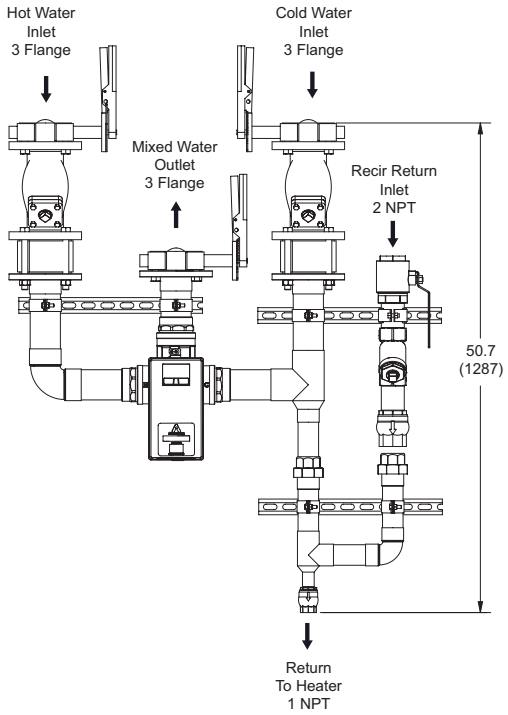

Connectivity

RS485 Serial Port – Integral MODBUS RTU for direct connectivity to BAS. Seamless integration with SAGE® (BS) connectivity options.

See DMC80BS Flex for SAGE® (BS) module available with specific ProtoCessor cards for BAS Connectivity to systems which operate on Modbus TCP, BACnet™, or LonWorks™ protocols. Mobile Connectivity may be enabled by a customer activated no-term subscription.

Mobile Connectivity features smart hot water system dashboard monitoring, secure remote programming, multi-location view, temperature and system diagnostic alerts, with unlimited digital documentation and automated report generation.

For a submittal drawing, refer to D86395.

Recirculation Systems - Digital (GPM and PSIG)

Model DMC80 Flex	Pressure Drop (PSIG)				Minimum System Draw-Off	C_v
	5	10	15	20		
GPM	94	133	163	188	0	42

Recirculation Systems - Digital (LPM and BARG)

Model DMC80 Flex	Pressure Drop (BARG)				Minimum System Draw-Off	C_v
	0.3	0.7	1.0	1.4		
LPM	355.8	503.5	617.0	711.7	0	42

Designs, materials, weights and performance ratings are approximate and subject to change without notice. Visit **armstrong**international.com for up-to-date information.

Armstrong Hot Water Group, 221 Armstrong Blvd., Three Rivers, MI 49093 – USA Phone: 269-279-3602, Fax: 269-279-3130
armstronginternational.com

Digital

The Brain® Model DMC80

DMC80 is a fully Digital Mixing Center (DMC) designed specifically to be the primary water temperature controller in a continuously pumped circulating hot water system.

Digital technology provides enhanced water temperature control accuracy which resists zero system demand "Temperature Creep" without the use of a manual throttling valve or a temperature activated pump shut-off device (aquastat).

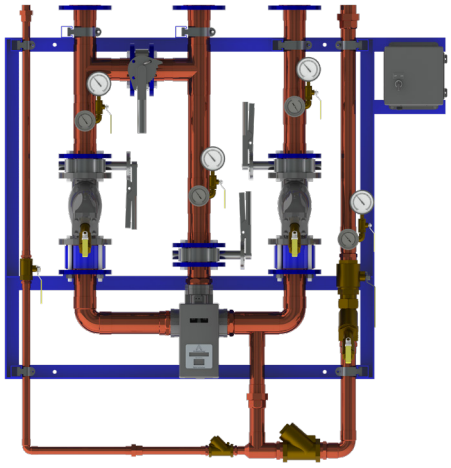

Operational Specifications (DRV80)

- +/-2°F DRV water temperature control at peak, moderate or zero fixture demand on hot water system designed for continuous recirculation
- 1°F minimum recirculating water temperature differential
- LCD display which indicates: set point, delivered temperature, error codes and alarm conditions capable of BAS and mobile connectivity
- Programmable set point range of 81-158°F (27-70°C) capable of BAS or mobile monitoring and adjustment
- Programmable thermal disinfection range of 158-185°F (70-85°C)
- Programmable 1st level hi/lo temp alarm display capable of BAS or mobile alerting
- Automatic safe closure of hot water inlet in response to: inlet supply failure, 110V power failure, or programmable high temperature error
- Automatic safe closure of hot water inlet powered by a replaceable lithium battery monitored for low-level alerting

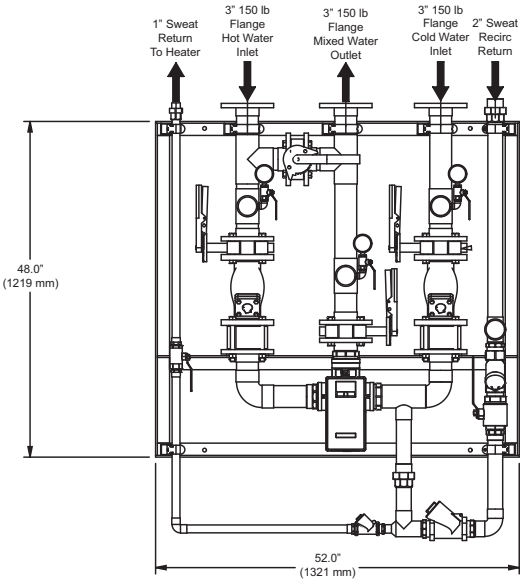

Technical Specifications (DRV80)

- 100-240V AC
- Polymer Electronics Enclosure
- Stainless Steel Valve Construction
- Lead Free compliant
- Maximum inlet HW supply temperature 185°F (85°C)
- Minimum Continuous Recirculation - 10 GPM (38 LPM)
- Minimum System Draw Off - 0 GPM
- Conforms to ASSE 1017, CSA B125.3-11, UL E357437, and CE
- Operational water pressure of 10-150 psig (7-10 barg)
- Display in °C or °F
- Shipping weight 660 lbs (299 kg)
- Integral MODBUS RTU for direct connectivity to BAS, or SAGE®

Connectivity

RS485 Serial Port – Integral MODBUS RTU for direct connectivity to BAS. Seamless integration with SAGE® (BS) connectivity options.

See DMC80BS for SAGE® (BS) module available with specific ProtoCessor cards for BAS Connectivity to systems which operate on Modbus TCP, BACnet™, or LonWorks™ protocols. Mobile Connectivity may be enabled by a customer activated no-term subscription.

Mobile Connectivity features smart hot water system dashboard monitoring, secure remote programming, multi-location view, temperature and system diagnostic alerts, with unlimited digital documentation and automated report generation.

For a submittal drawing, refer to D40815.

Recirculation Systems - Digital (GPM and PSIG)

Model DMC80	Pressure Drop (PSIG)				Minimum System Draw-Off	C_v
	5	10	15	20		
GPM	94	133	163	188	0	42

Recirculation Systems - Digital (LPM and BARG)

Model DMC80	Pressure Drop (BARG)				Minimum System Draw-Off	C_v
	0.3	0.7	1.0	1.4		
LPM	355.8	503.5	617.0	711.7	0	42

Designs, materials, weights and performance ratings are approximate and subject to change without notice. Visit **armstrong**international.com for up-to-date information.

Armstrong Hot Water Group, 221 Armstrong Blvd., Three Rivers, MI 49093 – USA Phone: 269-279-3602, Fax: 269-279-3130
armstronginternational.com

Digital

The Brain® Model DMC80-80

DMC80-80 is a fully Digital Mixing Center (DMC) designed specifically to be the primary water temperature controller in a continuously pumped circulating hot water system.

Digital technology provides enhanced water temperature control accuracy which resists zero system demand "Temperature Creep" without the use of a manual throttling valve or a temperature activated pump shut-off device (aquastat).

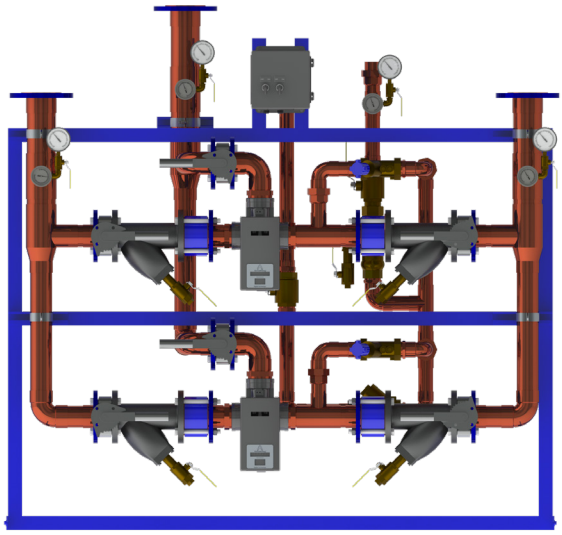

Operational Specifications (DRV80)

- +/-2°F DRV water temperature control at peak, moderate or zero fixture demand on hot water system designed for continuous recirculation
- 1°F minimum recirculating water temperature differential
- LCD display which indicates: set point, delivered temperature, error codes and alarm conditions capable of BAS and mobile connectivity
- Programmable set point range of 81-158°F (27-70°C) capable of BAS or mobile monitoring and adjustment
- Programmable thermal disinfection range of 158-185°F (70-85°C)
- Programmable 1st level hi/lo temp alarm display capable of BAS or mobile alerting
- Automatic safe closure of hot water inlet in response to: inlet supply failure, 110V power failure, or programmable high temperature error
- Automatic safe closure of hot water inlet powered by a replaceable lithium battery monitored for low-level alerting

Technical Specifications (DRV80)

- 100-240V AC
- Polymer Electronics Enclosure
- Stainless Steel Valve Construction
- Lead Free compliant
- Maximum inlet HW supply temperature 185°F (85°C)
- Minimum Continuous Recirculation - 10 GPM (38 LPM) per DRV80
- Minimum System Draw Off - 0 GPM
- Conforms to ASSE 1017, CSA B125.3-11, UL E357437, and CE
- Operational water pressure of 10-150 psig (7-10 barg)
- Display in °C or °F
- Shipping weight 1,195 lbs (542 kg)
- Integral MODBUS RTU for direct connectivity to BAS, or SAGE®

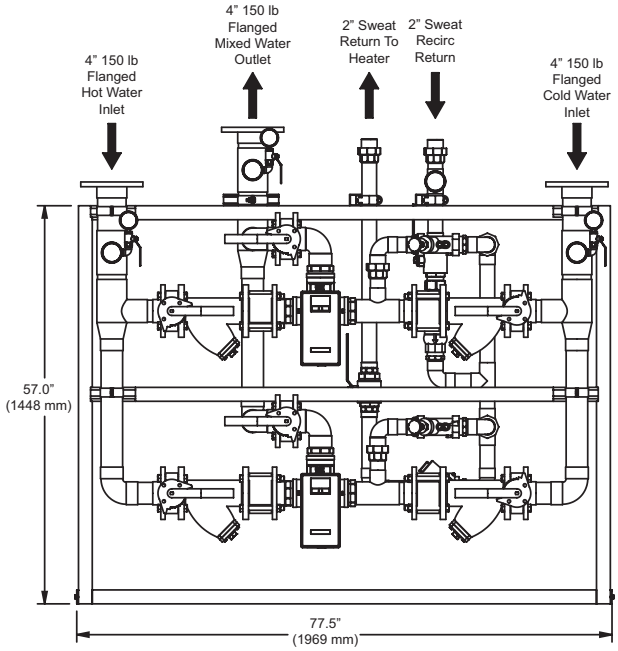

Connectivity

RS485 Serial Port – Integral MODBUS RTU for direct connectivity to BAS. Seamless integration with SAGE® (BS) connectivity options.

See DMC80-80BS for SAGE® (BS) module available with specific ProtoCessor cards for BAS Connectivity to systems which operate on Modbus TCP, BACnet™, or LonWorks™ protocols. Mobile Connectivity may be enabled by a customer activated no-term subscription.

Mobile Connectivity features smart hot water system dashboard monitoring, secure remote programming, multi-location view, temperature and system diagnostic alerts, with unlimited digital documentation and automated report generation.

For a submittal drawing, refer to D40817.

Recirculation Systems - Digital (GPM and PSIG)

Model DMC80-80	Pressure Drop (PSIG)				Minimum System Draw-Off	C_V
	5	10	15	20		
GPM	188	266	326	376	0	84

Recirculation Systems - Digital (LPM and BARG)

Model DMC80-80	Pressure Drop (BARG)				Minimum System Draw-Off	C_V
	0.3	0.7	1.0	1.4		
LPM	711.7	1006.9	1234.0	1423.3	0	84

Designs, materials, weights and performance ratings are approximate and subject to change without notice. Visit **armstrong**international.com for up-to-date information.

Armstrong Hot Water Group, 221 Armstrong Blvd., Three Rivers, MI 49093 – USA Phone: 269-279-3602, Fax: 269-279-3130
armstronginternational.com

Digital

The Brain® Model DMC80-80-80

DMC80-80-80 is a fully Digital Mixing Center (DMC) designed specifically to be the primary water temperature controller in a continuously pumped circulating hot water system.

Digital technology provides enhanced water temperature control accuracy which resists zero system demand "Temperature Creep" without the use of a manual throttling valve or a temperature activated pump shut-off device (aquastat).

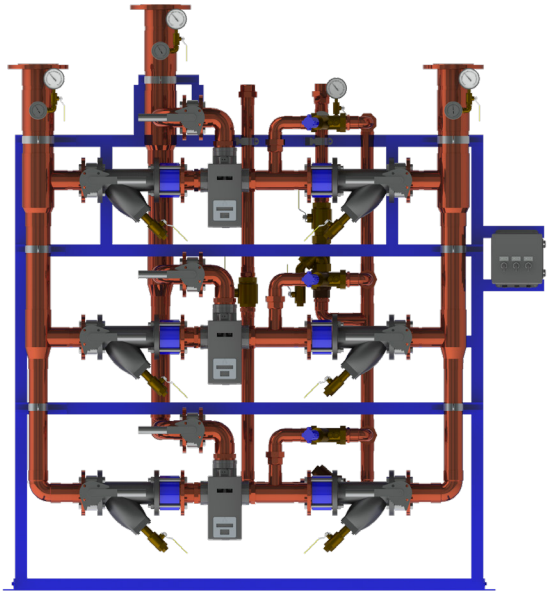

Operational Specifications (DRV80)

- +/-2°F DRV water temperature control at peak, moderate or zero fixture demand on hot water system designed for continuous recirculation
- 1°F minimum recirculating water temperature differential
- LCD display which indicates: set point, delivered temperature, error codes and alarm conditions capable of BAS and mobile connectivity
- Programmable set point range of 81-158°F (27-70°C) capable of BAS or mobile monitoring and adjustment
- Programmable thermal disinfection range of 158-185°F (70-85°C)
- Programmable 1st level hi/lo temp alarm display capable of BAS or mobile alerting
- Automatic safe closure of hot water inlet in response to: inlet supply failure, 110V power failure, or programmable high temperature error
- Automatic safe closure of hot water inlet powered by a replaceable lithium battery monitored for low-level alerting

Technical Specifications (DRV80)

- 100-240V AC
- Polymer Electronics Enclosure
- Stainless Steel Valve Construction
- Lead Free compliant
- Maximum inlet HW supply temperature 185°F (85°C)
- Minimum Continuous Recirculation - 10 GPM (38 LPM) per DRV80
- Minimum System Draw Off - 0 GPM
- Conforms to ASSE 1017, CSA B125.3-11, UL E357437, and CE
- Operational water pressure of 10-150 psig (7-10 barg)
- Display in °C or °F
- Shipping weight 1,980 lbs (898 kg)
- Integral MODBUS RTU for direct connectivity to BAS, or SAGE®

Connectivity

RS485 Serial Port – Integral MODBUS RTU for direct connectivity to BAS. Seamless integration with SAGE® (BS) connectivity options.

See DMC80-80-80BS for SAGE® (BS) module available with specific ProtoCessor cards for BAS Connectivity to systems which operate on Modbus TCP, BACnet™, or LonWorks™ protocols. Mobile Connectivity may be enabled by a customer activated no-term subscription.

Mobile Connectivity features smart hot water system dashboard monitoring, secure remote programming, multi-location view, temperature and system diagnostic alerts, with unlimited digital documentation and automated report generation.

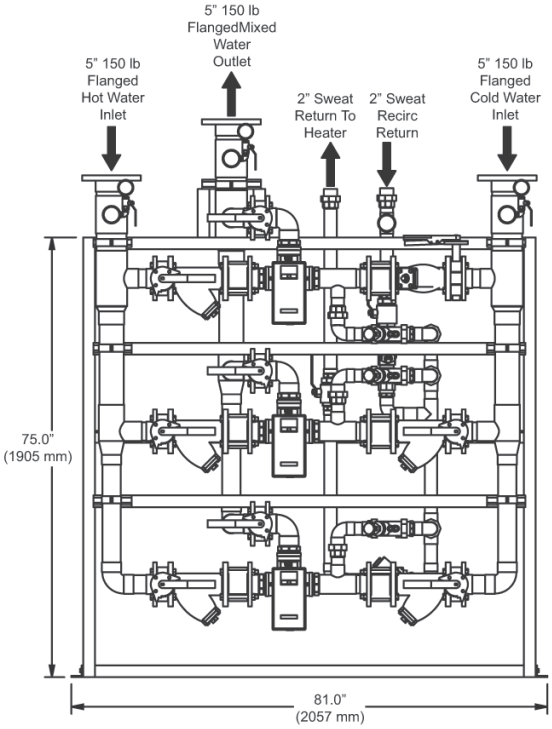

For a submittal drawing, refer to D40819.

Recirculation Systems - Digital (GPM and PSIG)						
Model DMC80-80-80	Pressure Drop (PSIG)				Minimum System Draw-Off	C_V
	5	10	15	20		
GPM	282	399	489	564	0	126

Recirculation Systems - Digital (LPM and BARG)						
Model DMC80-80-80	Pressure Drop (BARG)				Minimum System Draw-Off	C_V
	0.3	0.7	1.0	1.4		
LPM	1067.5	1510.4	1851.1	2135.0	0	126

Designs, materials, weights and performance ratings are approximate and subject to change without notice. Visit **armstrong**international.com for up-to-date information.

Armstrong Hot Water Group, 221 Armstrong Blvd., Three Rivers, MI 49093 – USA Phone: 269-279-3602, Fax: 269-279-3130
armstronginternational.com

Connectivity

THE BRAIN® AND SAGE®

SAGE® works seamlessly with The Brain® as it analyzes data to track behavior and performance as an integral component of a hot water system operation protocol which complies with a Standard of Care.

The Brain™ and every derivative assembly is supplied with an integral RS485 serial port. This port provides a direct connection to Building Automation Systems which operate on a **Modbus RTU** protocol.

The RS485 port is also deployed for direct connection to an optionally supplied Building System (BS) Module.

SAGE® Options

SAGE® for Building Automation Systems (BAS) – BS Module available with BAS specific ProtoCessor cards for connection to systems which operate on **Modbus TCP**, **BACnet**™ or **LonWorks**™ protocols.

SAGE® for Mobile Connectivity - Featuring smart hot water system dashboard monitoring, secure remote programming, multi-location view, temperature and system diagnostic alerts, with unlimited digital documentation and automated report generation.

Mobile connectivity may be enabled by a customer activated no-term subscription.

Optional Building System (BS) Module

Adding a suffix BS to any Brain DRV or DMC model number in this brochure (example DRV80R-BS) will automatically add SAGE®, the supplemental hardware and software required to maximize the connectivity features of Armstrong digital technology.

Armstrong Hot Water Group, 221 Armstrong Blvd., Three Rivers, MI 49093 – USA Phone: 269-279-3602, Fax: 269-279-3130
armstronginternational.com

Smart Hot Water System Monitoring & Documentation

DOCUMENTATION & RECORDKEEPING
Establish documentation and maintain records.

ASHRAE Standard 188-2015

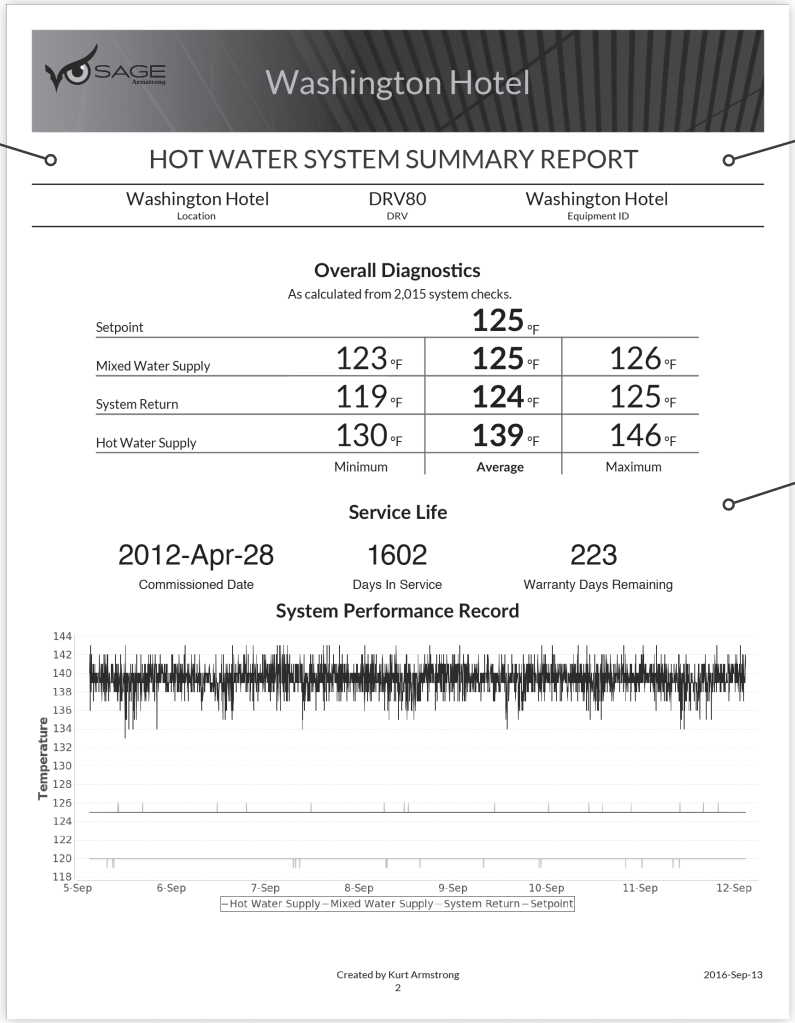

Washington Hotel

HOT WATER SYSTEM SUMMARY REPORT

Washington Hotel (Location)	DRV80 (DRV)	Washington Hotel (Equipment ID)

Overall Diagnostics

As calculated from 2,015 system checks.

	Minimum	Average	Maximum
Setpoint		125 °F	
Mixed Water Supply	123 °F	125 °F	126 °F
System Return	119 °F	124 °F	125 °F
Hot Water Supply	130 °F	139 °F	146 °F

Service Life

2012-Apr-28	1602	223
Commissioned Date	Days In Service	Warranty Days Remaining

System Performance Record

Created by Kurt Armstrong
2

2016-Sep-13

CONTROL LIMITS
Establish limits within which a chemical or physical parameter must be monitored and maintained.

ASHRAE Standard 188-2015

SAGE®

Simple, effective monitoring, logging and remote alerting of key temperature control components of a hot water system safety risk management plan, for a modest monthly fee.

1. **Dashboard Monitoring** – In real time.
2. **Secure Remote Programming** – You are in control.
3. **Multi-location View** – All properties simultaneously or filtered.
4. **Temperature and System Diagnostic Alerts** – In real time.
5. **Digital Documentation and Record keeping** – For as long as you want to retain it.

Designs, materials, weights and performance ratings are approximate and subject to change without notice. Visit **armstrong**international.com for up-to-date information.

Armstrong Hot Water Group, 221 Armstrong Blvd., Three Rivers, MI 49093 – USA Phone: 269-279-3602, Fax: 269-279-3130
armstronginternational.com

MONITORING
Establish a system for monitoring the parameters associated with the control limits established in 6.1.3.

ASHRAE Standard 188-2015

STANDARDS OF CARE

A Standard of Care is defined as acknowledged applicable laws, standards and guidelines.

OSHA (1998), Joint Commission Environment of Care (2001), ASHRAE Guideline 12-2000, ASHRAE Standard 188-2015 and VA Directive 1061 (2014) are Standards of Care which include critical recommendations for establishing and monitoring hot water system temperature control limits.

REDUCING THE RISK

Following a Standard of Care can minimize the risk of scald injury, Legionella-related illness and the associated litigation.

"Former guests of the Las Vegas Aria Resort & Casino can't seek punitive damages in a case alleging they contracted Legionnaires' disease from the hotel's water system, because management took adequate water safety steps, a Nevada federal judge ruled Monday." (Law 360 Legal News Service, 2015.)

"In 2014 ASHRAE came out with consensus guidelines, it's actually a standard that is directed at primary prevention of Legionella growth and transmission in building water-systems. It calls for building-owners and managers to assess the water systems in their building, figure out where there are vulnerabilities, and come up with plans to monitor those." (Laura Cooley, M.D., M.P.H. medical epidemiologist, Centers for Disease Control and Prevention.)

ASHRAE

Guideline 12-2000

4.1.6 **RECOMMENDED TREATMENT:** Hot water stored above 140°F (60°C), minimum recirculated return 124°F (51°C).

Standard 188-2015 Legionellosis: Risk Management for Building Water Systems

6.1.3 **CONTROL LIMITS:** Establish limits within which a chemical or physical parameter must be monitored and maintained.

6.1.4 **MONITORING:** Establish a system for monitoring the parameters associated with the control limits established in 6.1.3.

6.1.7 **DOCUMENTATION AND RECORD KEEPING:** Establish documentation and maintain records.

Armstrong Hot Water Group, 221 Armstrong Blvd., Three Rivers, MI 49093 – USA Phone: 269-279-3602, Fax: 269-279-3130
armstronginternational.com

Standards & Approvals

Plumbing Standards and the requisite approvals & compliances are often left open to interpretation. Any misinterpretation and resulting misapplication of an ambiguous directive can result in inflated project costs, poor system performance, long term maintenance expense increases, conflict with adjacent standards and potential human safety risk.

ASSE 1016

Performance Requirements for Automatic Compensating Valves for Individual Showers and Tub/Showers Combinations

Armstrong Model – Sense

ASSE 1017

Performance Requirements for Temperature Actuated Mixing Valves for Hot Water Distribution Systems

Armstrong Models – The Brain Models DRV40 & DRV80, Model 320, Model 425

ASSE 1069

Performance Requirements for Automatic Temperature Control Mixing Valves

Armstrong Model 215

ASSE 1070

Performance Requirements for Water Temperature Control Devices

Armstrong Models - None

ASSE 1070 shall control and limit the water temperature to fittings for fixtures such as sinks, lavatories or bathtubs and are intended to reduce the risk of scalding.

ASSE 1070 was conceived to address point of use mixing valves which typically have 3/8” or ½” connections and maximum flow rates of < 5 GPM.

In North America multiple State Plumbing Codes are generally copy & paste adoptions of the Uniform Plumbing Code (UPC). The reference to the required use of an ASSE 1070 compliant Water Temperature Control Device within UPC appears solely in Section 421.2

421.2 Limitation of Hot Water Temperature for Public Lavatories. Hot water delivered from public-use lavatories shall be limited to a maximum temperature of 120°F (49°C) by a device that is in accordance with ASSE 1070 or CSA B125.3. The water heater thermostat shall not be considered a control for meeting this provision.

Conclusion

The term Public Lavatories is interpreted to convey a requirement for a 1070 approved valve at the point of use for general public use washrooms in airports, schools, prisons, dormitories, nursing homes, hotels and related institutional environments.

By definition exclusions would be private patient rooms, prison cells, hotel rooms, individual dorm rooms etc.

The use of the word OR in between ASSE 1070 and CSA B125.3 indicates that compliance with either standard is approved.

CSA B125.3 details as follows:

4.10 Temperature-actuated mixing valves

Temperature Actuated Mixing Valves shall comply with the performance requirements of ASSE 1017.

Designs, materials, weights and performance ratings are approximate and subject to change without notice. Visit **armstrong**international.com for up-to-date information.

Armstrong Hot Water Group, 221 Armstrong Blvd., Three Rivers, MI 49093 – USA Phone: 269-279-3602, Fax: 269-279-3130
armstronginternational.com

INTELLIGENT SOLUTIONS IN STEAM, AIR AND HOT WATER

Armstrong International
North America • Latin America • India • Europe / Middle East / Africa • China • Pacific Rim
armstronginternational.com

© 2020 Armstrong International, Inc.

HW-200-EN V14.6